TECHNICAL MANUAL

UNIT, DIRECT SUPPORT, AND GENERAL SUPPORT MAINTENANCE MANUAL

(INCLUDING REPAIR PARTS AND SPECIAL TOOLS LIST)

LIGHT SET, DENTAL OPERATING, FIELD, PELTON & CRANE MODEL LF II

6520-00-000-0158

APPROVED FOR PUBLIC RELEASE; DISTRIBUTION IS UNLIMITED

HEADQUARTERS, DEPARTMENT OF THE ARMY

1991

SAFETY STEPS TO FOLLOW IF SOMEONE IS THE VICTIM OF ELECTRICAL SHOCK

DO NOT TRY TO PULL OR GRAB THE INDIVIDUAL

IF POSSIBLE, TURN OFF THE ELECTRICAL POWER

IF YOU CANNOT TURN OFF THE ELECTRICAL POWER, PULL, PUSH, OR LIFT THE PERSON TO SAFETY USING A DRY WOODEN POLE OR A DRY ROPE OR SOME OTHER INSULATING MATERIAL

SEND FOR HELP AS SOON AS POSSIBLE

AFTER THE INJURED PERSON IS FREE OF CONTACT WITH THE SOURCE OF ELECTRICAL SHOCK, MOVE THE PERSON A SHORT DISTANCE AWAY AND IMMEDIATELY START ARTIFICIAL RESUSCITATION

Throughout this manual are WARNINGS, CAUTIONS, and NOTES. Please take time to read these. They are there to protect you and the equipment.

WARNING

Procedures which must be observed to avoid personal injury, and even loss of life.

CAUTION

Procedures which must be observed to avoid damage to equipment, destruction of equipment, or long-term health hazards.

NOTE

Essential information that should be remembered.

TECHNICAL MANUAL

NO. 8-6520-001-24&P

HEADQUARTERS
DEPARTMENT OF THE ARMY
WASHINGTON, DC

UNIT, DIRECT SUPPORT, AND GENERAL SUPPORT MAINTENANCE MANUAL (INCLUDING REPAIR PARTS AND SPECIAL TOOLS LIST)

LIGHT SET, DENTAL OPERATING, FIELD, PELTON & CRANE MODEL LF II

6520-00-000-0158

You can help improve this manual. If you find any mistakes or if you know a way to improve procedures, please let us know. Mail your memorandum, DA Form 2028 (Recommended Changes to Publications and Blank Forms), or DA Form 2028-2 (Recommended Changes to Equipment Technical Publications) located in the back of this manual, to: Commander, U.S. Army Medical Materiel Agency, ATTN: SGMMA-M, Frederick, MD 21702-5001. A reply will be furnished directly to you.

Approved for public release; distribution is unlimited.

TABLE OF CONTENTS

			Page
		HOW TO USE THIS MANUAL	iv
CHAPTER	1.	INTRODUCTION	
Section	I.	General Information	1-1
	II.	Equipment Description and Data	1-2
	III.	Principles of Operation	1-5
CHAPTER	2.	OPERATING INSTRUCTIONS	
Section	I.	Operating Procedures	2-1
	II.	Operational Factors	2-1
	III.	Operation of Auxiliary Equipment	2-2
	IV.	Operation Under Unusual Conditions	2-2
CHAPTER	3.	UNIT LEVEL MAINTENANCE	
Section	I.	General Information	3-1
	II.	Service Upon Receipt of Equipment	3-1

	III.	Voltage Conversion Instructions	3-4
	IV.	Lubrication Instructions	3-5
	V.	Preventive Maintenance Checks and Services	3-5
	VI.	Functional Testing	3-6
	VII.	Troubleshooting	3-6
	VIII.	Maintenance Instructions	3-8
	IX.	Storage and Shipment Procedures	3-20
CHAPTER	4.	DIRECT SUPPORT AND GENERAL SUPPORT MAINTENANCE	
Section	I.	General Information	4-1
	II.	Troubleshooting	4-1
APPENDIX	A.	REFERENCES	A-1
	B.	MAINTENANCE ALLOCATION CHART	B-1
	C.	COMPONENTS OF END ITEM AND BASIC ISSUE ITEMS LIST	C-1
	D.	EXPENDABLE AND DURABLE SUPPLIES AND MATERIALS LIST	D-1
	E.	REPAIR PARTS AND SPECIAL TOOLS LIST	E-1
GLOSSARY			GLOSSARY-1
INDEX			INDEX-1

LIST OF ILLUSTRATIONS

Figure No.	*Title*	*Page*
1-1	Dimmer control, power switch, and shields	1-2
1-2	Lamp and reflector	1-3
1-3	Spring-loaded slides and handles	1-3
1-4	Case data plate	1-4
1-5	Arm data plates	1-4
3-1	Transformer end cap	3-2
3-2	Electrical connection - 120 volts	3-3
3-3	Electrical connections - 240 volts	3-3
3-4	Electrical schematic	3-8
3-5	Shield removal	3-9
3-6	Lamp and reflector	3-10
3-7	Adjustment screws for focusing lamp	3-11
3-8	Focusing patterns	3-12
3-9	Light yoke disassembly	3-13
3-10	Electrical disassembly	3-13
3-11	Mechanical disassembly	3-14
3-12	Position screw removal	3-14
3-13	Wiring removal	3-15
3-14	Screw removal	3-15
3-15	Snubbing pin removal	3-16
3-16	Gas tool	3-16
3-17	Arm disassembly	3-17
3-18	Punch out pin	3-17
3-19	Cover removal and gas spring	3-18

3-20	Arm cover reassembly (front)	3-18
3-21	Arm cover reassembly (rear)	3-19
E-1	Light head assembly	E-2
E-2	Front arm assembly	E-6
E-3	Front arm assemblies and yoke	E-8
E-4	Rear arm	E-10

LIST OF TABLES

Number	*Title*	*Page*
1-1	Nomenclature cross-reference list	1-2
1-2	Light pattern dimensions	1-3
1-3	Lamp specifications	1-3
1-4	Electrical characteristics	1-3
3-1	Preventive maintenance checks and services	3-6
3-2	General troubleshooting	3-7

HOW TO USE THIS MANUAL

- ☐ This manual provides all the information needed to understand the capabilities, functions, and characteristics of the dental light. It describes how to set up, operate, test, and repair the item. You must familiarize yourself with the entire manual before operating or beginning a maintenance task.

- ☐ The manual is arranged by chapters, sections, and paragraphs followed by appendixes, a glossary, an index, and DA Forms 2028-2. Use the table of contents to help locate the chapter or section for the general subject area needed. The index will help locate more specific subjects.

- ☐ Multiple figures and tables are provided for your ease in using this manual. Words that are both capitalized and in quotation marks are names of components or words that you will actually see on the equipment.

- ☐ Chapter 3 provides a systematic method of inspecting and servicing the dental light. In this way, small defects can be detected early before they become a major problem causing the unit to fail to complete its mission. Make a habit of doing the checks and services in the same order each time and anything wrong will be detected quickly.

- ☐ Specific direct support and general support maintenance instructions are included. Only perform maintenance functions specified in the maintenance allocation chart for your level of maintenance. Maintenance functions specified for higher levels of maintenance frequently require additional training; test, measurement, and diagnostic equipment; or tools.

CHAPTER 1

INTRODUCTION

Section I. GENERAL INFORMATION

1-1. Scope.

This manual describes the dental light; provides maintenance personnel with equipment technical data and installation procedures; and provides operational and maintenance functions, services, and actions. Additional information follows:

a. Type of manual. Unit, direct support (DS), and general support (GS) maintenance (including repair parts and special tools list).

b. Model number and equipment name. Pelton and Crane, LF II, Light Set, Dental Operating, Field.

c. Purpose of equipment. Provides a glare-free source of light during dental procedures.

1-2. Explanation of abbreviations and terms.

Special or unique abbreviations, acronyms, and terms used within this manual are explained in the glossary.

1-3. Maintenance forms, records, and reports.

TB 38-750-2 prescribes forms, records, reports, and procedures.

1-4. Destruction of Army materiel to prevent enemy use.

AR 40-61 contains instructions for destruction and disposal of Army medical materiel. Also, the SB 8-75 series publications provide periodic information and/or instructions on the disposal of medical materiel that are hazardous.

1-5. Administrative storage.

a. Placement of the dental light in administrative storage should be for short periods of time when a shortage of maintenance effort exists. Items should be in mission readiness condition within 24 hours or within the time factors as determined by the directing authority. During the storage period, appropriate maintenance records will be kept.

b. Army equipment placed in administrative storage will have preventive maintenance performed in accordance with the preventive maintenance checks and services (PMCS) listed in table 3-1 before storage. When equipment is removed from storage, PMCS will be performed to assure operational readiness.

c. Inside storage is preferred for equipment selected for administrative storage.

1-6. Preparation for storage or shipment.

Refer to chapter 3, section IX for the procedures used to prepare the dental light for storage or shipment.

1-7. Quality assurance or quality control (QA or QC).

TB 740-10/DLAM 4155.5/AFR 67-43 contains QA or QC requirements and procedures.

1-8. Nomenclature cross-reference list.

Table 1-1 identifies official versus commonly used nomenclatures.

Table 1-1. Nomenclature cross-reference list.

Common name	Official nomenclature
Case	Carrying case
Dental light	Light set, dental operating, field
Gas tool	Wrench assembly, allen
Lamp	Quartz-halogen lamp

1-9. Reporting and processing medical materiel complaints and/or quality improvement reports.

AR 40-61 prescribes procedures for submitting medical materiel complaints and/or quality improvement reports for the dental light.

1-10. Warranty information.

A warranty is not applicable.

Section II. EQUIPMENT DESCRIPTION AND DATA

1-11. Equipment characteristics, capabilities, and features.

a. The dental light is a self-contained subsystem of the Chair and Stool Unit, Dental Operating, Field. It is designed to be mounted on the base plate of the chair.

b. The unit and accessories are packed and stored in a reusable case.

c. The light pattern is variable within a specific range and can be refocused as desired. The pattern shape remains constant throughout the range of operating distances without pattern separation.

d. The back surface coating of the reflector, which diffuses light emitting from the back of the reflector, is ceramic material (frit) fused into the glass to prevent peeling. The dichroic coating on the front surface reflects visible energy (light), but allows infrared and ultraviolet energy to pass through the reflector. This dichroic coating also controls the color of the visible light.

e. Drift-free arm movement is provided by a gas spring rather than conventional compression coil springs.

1-12. Description of significant components.

a. Dimmer control (fig 1-1). The rotary dimmer control is located in the back of the rear arm. The control can be adjusted to "LO" (low), "MED" (medium), and "HI" (high) intensities.

b. Power switch (fig 1-1). The power switch is a long hand-led toggle switch located behind the light head.

c. Shields (fig 1-1). The plastic shields are provided as a safety feature to prevent water from splashing on the glass reflector or lamp. The shield will also retain broken glass in the unlikely event that a lamp explodes.

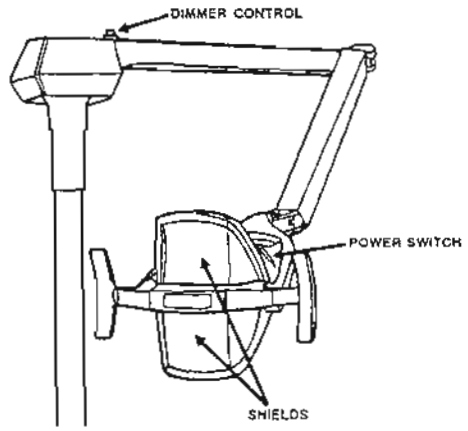

Figure 1-1. Dimmer control, power switch, and shields.

d. Lamp (fig 1-2). The lamp is a miniature quartz-halogen lamp which uses a self-cleaning process that maintains constant light intensity throughout its life. The lamp is easily replaceable without tools.

e. Reflector (fig 1-2). The dichroic coated reflector directs the desired visible light and allows unwanted light and heat to pass through the reflector. The reflector collects light from a wide angle and produces a high intensity and glare-free light pattern.

f. Handles (fig 1-3). The two handles of each dental light are of highly durable plastic which can be sterilized. The handles are spring-loaded for easy removal and replacement without tools.

NOTE

The sterilized handles are intended to increase effective asepsis.

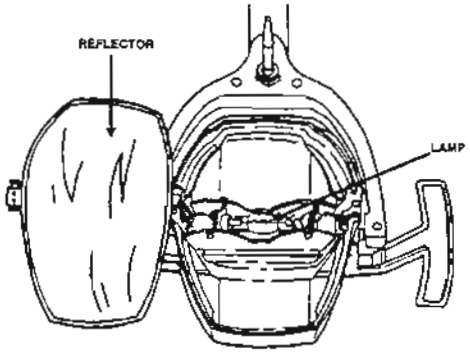

Figure 1-2. Lamp and reflector.

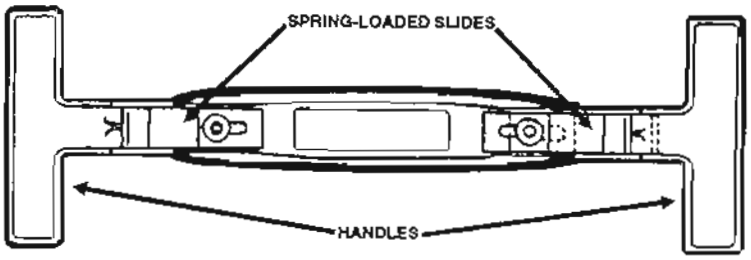

Figure 1-3. Spring-loaded slides and handles.

1-13. Tabulated data.

The tabulated data provides the light pattern dimensions, lamp specifications, and electrical characteristics for the dental light.

a. Dimensions, specifications, and characteristics. Tables 1-2 through 1-4 provide a broad range of dimensions, material specifications, and miscellaneous characteristics.

Table 1-2. Light pattern dimensions.

Light pattern size	
Height	3 in. (7.6 cm)
Width	8 in. (20.3 cm)
Light pattern focus	27 in. (68.6 cm)
Light pattern range	18 in. (45.7 cm) to 36 in. (91.4 cm)

Table 1-3. Lamp specifications.

Lamp color temperature	3600°K to 4300°K
Lamp intensity	
Low	1500 fc
Medium	2000 fc
High	2500 fc

Table 1-4. Electrical characteristics.

Electrical power requirements	120 V, 50/60 Hz or 240 V, 50/60 Hz

Table 1-4. Electrical characteristics - continued.

Lamp power supply	19 V to 25 V
Transformer resistance	1.0 ohm
Electrical power cable length	12 ft

b. Identification, instruction, and warning plates, decals, or markings. Figure 1-4 provides information shown on the case data plate. Figure 1-5 provides information shown on data plates located on the arm of the unit. Also, located on the front of the case is an air relief valve. Press this valve before opening the case to equalize pressure.

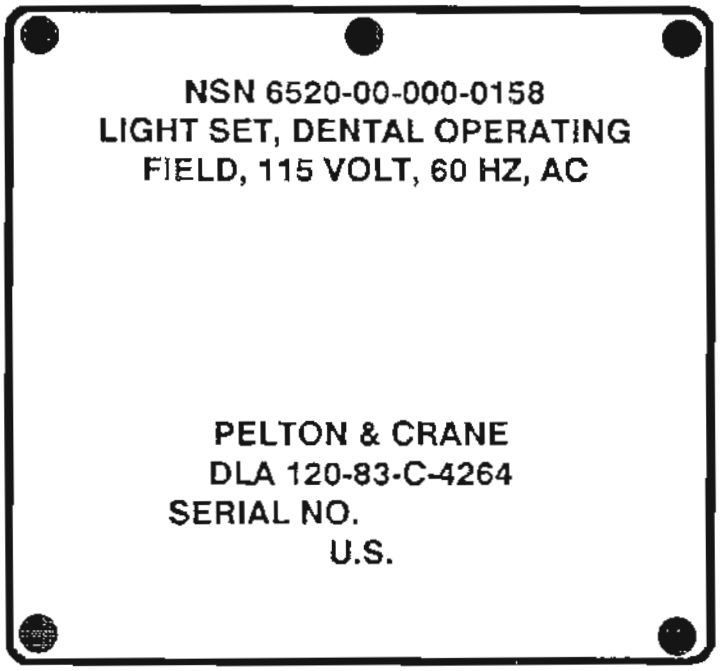

Figure 1-4. Case data plate.

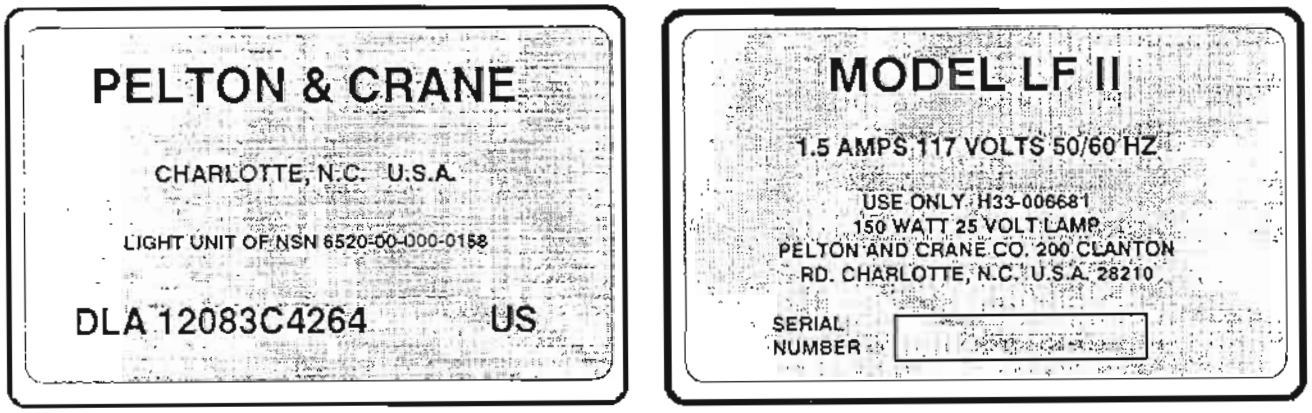

Figure 1-5. Arm data plates.

1-14. Model differences.

Model differences are not applicable since this manual covers a single model. However, design changes in assemblies, subassemblies, or components occur periodically. Information on such engineering changes will be published in supply bulletins and subsequent changes to this manual.

1-15. Safety, care, and handling.

a. Observe each WARNING, CAUTION, and NOTE in this manual. The use of electrical power, high illumination intensities, and high temperatures may be hazardous to personnel.

b. Assure that lamp shields are in place.

c. Follow the instructions for cleaning the components. The plastic shields and the reflector are easily damaged.

Section III. PRINCIPLES OF OPERATION

1-16. Control functions.

The operation of the dental light is controlled by a conventional toggle switch and a rotary dimmer control. The illumination pattern is controlled by mechanical adjustment screws.

1-17. Light generation.

a. The dental light electrical subsystem consists of the power cable, multi-voltage step-down transformer, power switch, and a variable voltage quartz-halogen lamp.

b. The high light intensities are achieved by an incandescent lamp enclosed in a quartz envelope containing halogen. Varying light intensities are available by use of the dimmer control.

CHAPTER 2

OPERATING INSTRUCTIONS

Section I. OPERATING PROCEDURES

2-1. Initial procedures.

a. Start-up procedures.

(1) Unpack, assemble, and prepare the dental light for operation by following the procedures in paragraph 3-7.

(2) Connect the unit to electrical power.

NOTE

The dental light is a module of a dental operating system and either a dental technician or a dentist will operate the light after seating and preparing a patient for a specific dental treatment procedure.

The lamp life may be extended, in addition to conserving energy, when the dimmer control is used on the lowest setting or the dental light is off when not required during a dental treatment procedure.

WARNING

DO NOT OPERATE THE DENTAL LIGHT unless the plastic shields are in place to prevent injury in case of a lamp explosion.

b. Procedures during patient treatment. The dental light will be turned "ON" and "OFF" or the dimmer control will be used to adjust the light intensity periodically during a dental treatment procedure by either a dental technician or dentist.

c. Shutdown procedures. Shutdown of the dental light is accomplished by simply turning the power switch to the "OFF" position.

SECTION II. OPERATIONAL FACTORS

2-2. Illumination factors.

Three factors consisting of the light head position, light focus, and cleanliness of the plastic shields and reflector affect light intensity. An explanation of each factor follows:

a. Light head position. The light head should be positioned from approximately 18 inches (45.7 cm) to 36 inches (91.4 cm) from the oral cavity.

b. Lamp focus. The lamp focus is initially factory set for an optimum light pattern at the above distances. The lamp focus can be adjusted to other distances.

c. Cleanliness. The cleanliness of the plastic shields and the front of the reflector can adversely impact upon optimum light intensity. Cleaning should be accomplished by following the procedures contained in paragraphs 3-18 and 3-19.

Section III. OPERATION OF AUXILIARY EQUIPMENT

2-3. Operation of auxiliary equipment.

The dental light is used with the following items of equipment.

a. Chair and Stool Unit, Dental Operating.

b. Dental Operating and Treatment Unit, Field.

Section IV. OPERATION UNDER UNUSUAL CONDITIONS

2-4. Operation under unusual conditions.

When operating the dental light under unusual conditions such as extremes in temperature or dusty environments, there are procedures that must be taken to protect the equipment. These procedures are contained in the preventive maintenance checks and services (PMCS) table in chapter 3.

CHAPTER 3

UNIT LEVEL MAINTENANCE

Section I. GENERAL INFORMATION

3-1. Overview.

Maintenance functions, both preventive and corrective, that are beyond the scope of the user are assigned to unit level medical equipment repairer personnel. These personnel will perform the majority of maintenance required for the dental light except for some tasks involving the transformer, reflector, mechanical components, and case. This chapter provides instructions and information to aid in performing the required tasks.

3-2. Tools and test equipment.

Common tools and test equipment required for maintenance of the dental light are listed in appendix B, section III of this manual. Refer to your unit's modified table of organization and equipment (MTOE) for authorized items.

3-3. Components of end item and basic issue items.

Components of end item and basic issue items are listed in appendix C, sections II and III of this manual.

3-4. Expendable supplies.

Expendable and durable supplies and materials required for maintenance of the dental light are listed in appendix D, section II of this manual.

3-5. Repair parts.

Repair parts required for unit level maintenance are listed in appendix E, section II of this manual.

3-6. Special tools.

Special tools required for maintenance of the dental light are listed in appendix E, section III of this manual.

Section II. SERVICE UPON RECEIPT OF EQUIPMENT

3-7. Inspecting and servicing the unit.

The dental light will be unpacked, inspected, and serviced as described in the following subparagraphs. Discrepancies must be reported in accordance with the instructions given in AR 40-61.

a. *Unpacking the unit.*

(1) Depress the air relief valve to release any pressure.

(2) Unfasten the six twist-lock clamps.

(3) Open the case.

(4) Observe how the components are packed in the molded foam.

(5) Remove the electrical power cable, hardware, and special tools. Set them aside.

NOTE

Observe the base plate of the chair. If holes have not been drilled for the chair mount bracket, follow the dental chair base plate modification procedures contained in the dental chair manual.

(6) Remove the light head and arm sections by lifting both sections of the arm smoothly while assuring that the light head is kept level. Set the light head and arm sections aside.

(7) Remove the upper post, lower post with hub, and the chair mount bracket.

(8) Inventory the components using this section and the listings in appendix C, sections II and III.

b. Servicing the unit.

(1) Attach the chair mount bracket to the post hub using four hex cap screws. Tighten the cap screws using a 3/16 inch key wrench.

(2) Place the chair mount bracket over the cap screws in the chair base. Install a flat washer, a lock washer, and a hex nut on each cap screw. Tighten each hex nut snugly with a 9/16 inch open-end or box-end wrench.

(3) Visually plumb the lower light mount post in two planes using the four thumb screws to assure the post is vertical or perpendicular to the base plate.

(4) Install the upper light mount post by slipping the proper end into the lower post.

(5) Pick up the light head and arm sections and position the light head behind your shoulder with the rear light arm section resting on your shoulder.

(6) Feed the electrical power connector and cable through the top of the upper post.

(7) Slip the light arm into the top of the post.

NOTE

The dental light should rotate freely on the post.

(8) Open the reflector and remove the plastic protective sheet.

NOTE

Save the protective sheet for repacking the dental light.

(9) Determine the voltage of the electrical power source for the dental light.

(10) Remove the four phillips head screws from the transformer end cap as illustrated in figure 3-1.

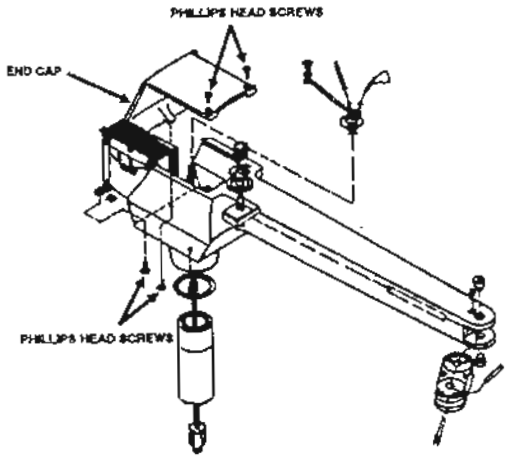

Figure 3-1. Transformer end cap.

(11) Lift off the end cap and set it aside.

(12) Determine the voltage set up by comparing the wiring connections as illustrated in figures 3-2 and 3-3.

NOTE

The dental light is initially set up for operation on 120 volts. The unit is also initially furnished with a 120-volt electrical connector.

(13) Install the end cap by replacing the four phillips head screws.

(14) Connect the dental light electrical connector to the electrical extension cord.

(15) Push the power switch to the "OFF" position.

(16) Connect the extension cord to the electrical power source.

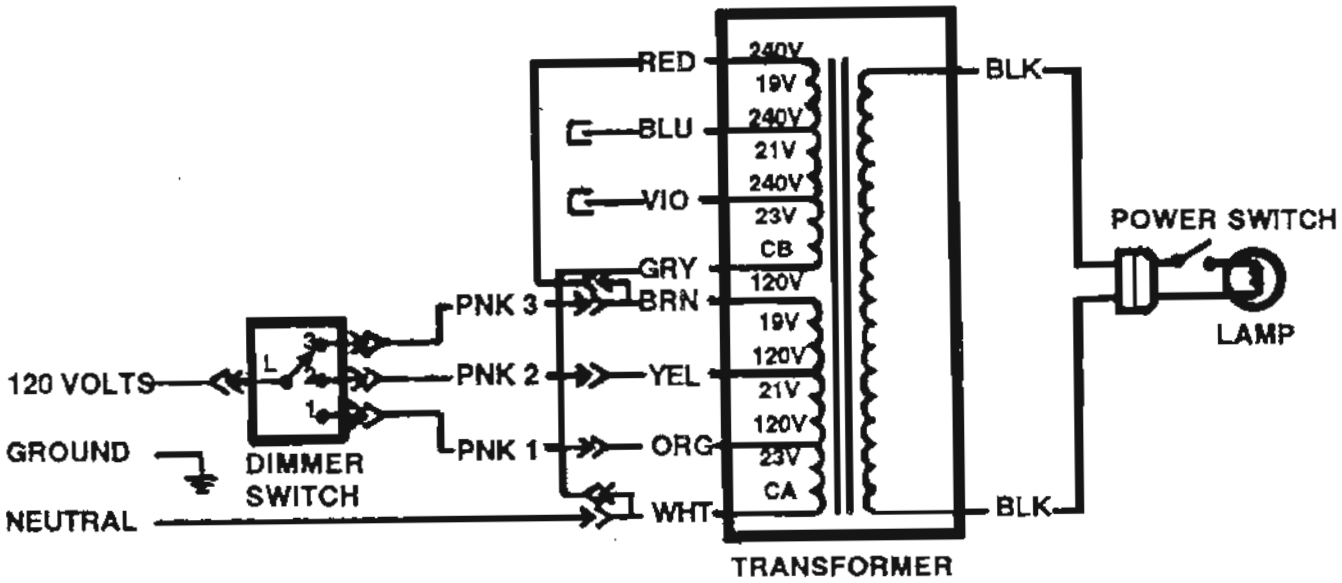

Figure 3-2. Electrical connections - 120 volts.

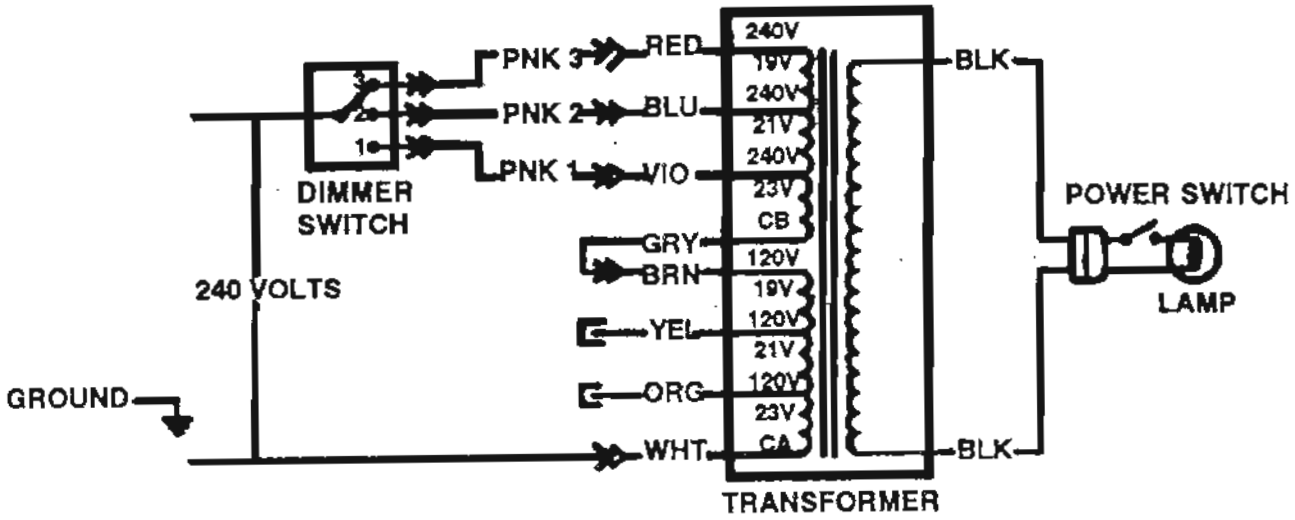

Figure 3-3. Electrical connections - 240 volts.

Section III. VOLTAGE CONVERSION INSTRUCTIONS

3-8. General.

a. This section of the manual contains step-by-step instructions for changing the operating voltage of the dental light from 120 volts to 240 volts and from 240 volts to 120 volts.

b. The instructions indicate the sequence for disconnecting specified wire color and/or wire number combinations and the connection of other wire color and/or wire number combinations.

c. Both voltage conversion procedures require the removal of four phillips head screws from the transformer end cap and the removal of the end cap to expose the transformer.

WARNING

Assure that the dental light is disconnected from electrical power to preclude electrical shock, injury, or electrocution.

3-9. Conversion procedures (120 volts to 240 volts).

Refer to figure 3-2.

a. Remove the transformer wires from the locking tab connectors and disconnect--
the gray wire from the white wire,
the red wire from the brown wire,
the brown wire from the pink wire labeled number "3,"
the yellow wire from the pink wire labeled number "2," and
the orange wire from the pink wire labeled number "1."

b. Insert the specified wires into the locking tab connectors and connect--
the gray wire to the brown wire,
the red wire to the pink wire labeled number "3,"
the blue wire to the pink wire labeled number "2," and
the violet wire to the pink wire labeled number "1."

c. Wrap all used and unused locking tab connectors with electrical insulation tape until no metal is exposed.

d. Pack all wires between the transformer and the arm housing.

e. Install the end cap and replace the four phillips head screws.

f. Remove the 120-volt electrical connector.

g. Install a 240-volt electrical connector.

h. Test the unit.

3-10. Conversion procedures (240 volts to 120 volts).

Refer to figure 3-3.

a. Remove the transformer wires from the locking tab connectors and disconnect--
the gray wire from the brown wire,
the red wire from the pink wire labeled number "3,"
the blue wire from the pink wire labeled number "2," and
the violet wire from the pink wire labeled number "1."

b. Insert the specified wires into the locking tab connectors and connect--

the gray wire and the white wire,

the red wire to the brown wire and the pink wire labeled number "3,"

the yellow wire to the pink wire labeled number "2," and

the orange wire to the pink wire labeled number "1."

c. Wrap all used and unused locking tab connectors with electrical insulation tape until no metal is exposed.

d. Pack all wires between the transformer and the arm housing.

e. Install the end cap and replace the four phillips head screws.

f. Remove the 240-volt electrical connector.

g. Install a 120-volt electrical connector.

h. Test the unit.

Section IV. LUBRICATION INSTRUCTIONS

3-11. General.

Lubrication requirements are limited to the dental light arm, post joint, and reflector clamp.

3-12. Light arm and post lubrication.

Apply a thin coat of lubricant to the dental light post, arm, post joint, and reflector clamp every 12 months.

CAUTION

The gas spring cylinder requires NO lubrication. Lubricant may damage the spring seal and allow the gas to escape resulting in replacement of the gas spring.

Section V. PREVENTIVE MAINTENANCE CHECKS AND SERVICES

NOTE

The PMCS chart in this section contains all necessary unit level services for the dental light.

3-13. General.

a. The dental light must be inspected and serviced systematically to assure that the unit is ready for operation at all times. Inspection will allow defects to be discovered and corrected before they result in serious damage or failure. Table 3-1 contains a tabulated list of PMCS items to be performed by unit level maintenance personnel.

b. Preventive maintenance is not limited to performing the checks and services listed in the PMCS table. There are things you should do any time you see they need to be done, such as checking for general cleanliness, observing for improper operational indicators, and maintaining the proper quantities of operating supplies.

c. The following is a list of the PMCS table column headings with a description of the information found in each column:

(1) *Item, Column 1.* This column shows the sequence in which to do the PMCS, and is used to identify the equipment area on the Equipment Inspection and Maintenance Worksheet, DA Form 2404.

(2) *Interval, Column 2.* This column shows when each PMCS item is to be serviced. D denotes daily and S denotes semiannually.

NOTE

Daily items are only required to be performed when the dental light is being used for its intended purpose.

When the equipment must be kept in continuous operation, check and service only those items that will not disrupt operation. Perform the complete daily checks and services when the equipment can be shut down.

(3) *Item to be Inspected, Column 3.* This column identifies the general area or specific part to be checked or serviced.

(4) *Procedures, Column 4.* This column explains how to perform the check or service. Deficiencies should be reported.

Table 3-1. Preventive maintenance checks and services.

ITEM	INTERVAL	ITEM TO BE INSPECTED	PROCEDURES
1	D	Chair mounting bracket	Check for tight hex nuts.
2	D	Mounting post	Check for proper vertical alignment.
3	S	Electrical cable and connector	Inspect the cable and connector for damage or deterioration.
4	D	Light arm	a. Check friction joints for tightness. b. Check for arm drift.
5	D	Plastic shields	Check for cleanliness.
6	S	Reflector (front surface)	Check for cleanliness.
7	D	Dimmer control	Check for smooth rotary operation and varying light intensity.

3-14. Reporting deficiencies.

If operator personnel discover any problem with the equipment during PMCS that they are unable to correct, it must be reported. Refer to TB 38-750-2 and report the deficiency using the proper forms. Consult with your unit level medical equipment repairer if assistance is required.

Section VI. FUNCTIONAL TESTING

3-15. Scope.

This section contains information for testing the dental light. Perform these tests following the initial receipt and installation of the unit and semiannually thereafter.

a. Preventive maintenance checks and services. Perform the PMCS listed in paragraph 3-13 before performing functional testing.

b. Functional testing. Functional testing is performed by following the procedures in paragraph 2-1.

Section VII. TROUBLESHOOTING

3-16. General.

a. General troubleshooting information for locating and correcting many of the operating malfunctions which may develop in the dental light is located in table 3-2. Symptoms are provided for common malfunctions likely to occur. Each symptom is followed by possible causes and corrective actions. An electrical dental light schematic is also provided to perform voltage troubleshooting. This manual cannot list all possible malfunctions. If a malfunction is not listed or is not determined by routine diagnostic procedures, notify your appropriate maintenance support unit.

Table 3-2. General troubleshooting.

SYMPTOM
POSSIBLE CAUSE
CORRECTIVE ACTION

1. UNIT DOES NOT OPERATE.
   - Power switch off.
     - Push switch to "ON" position.
   - No voltage to unit.
     - Check electrical source.
   - No voltage from dimmer switch.
     - Repair or replace switch.
   - No voltage to transformer.
     - Check and repair or replace the electrical connector or cable.
   - No electrical power from the transformer.
     - Check and repair or replace transformer.
   - Lamp not inserted into lampholder.
     - Seat lamp or rotate lamp to ensure proper seating.
   - Lamp burned out.
     - Replace lamp.
2. HANDLES ARE HOT.
   - Light on and pointed toward the ceiling when not in use.
     - Point lamp downward, lower the light intensity, and/or turn the light off when not in use.
   - Handles touching light frame.
     - Replace handles and/or handle insulators.
   - Voltage too high.
     - Check and adjust voltage.
3. REFLECTOR CLAMP INOPERATIVE.
   - Pushing clamp incorrectly.
     - Push clamp with thumb while gripping the handle with fingers.
   - Hinge movement.
     - Adjust hinge.
   - Clamp requires lubrication.
     - Lightly oil release pin.
4. LIGHT TOO DIM.
   - Dimmer switch on "LOW" position.
     - Adjust switch.
   - Dirty shields and/or reflector.
     - Clean dirty components.
   - Lamp envelope darkened.
     - Replace lamp.
   - Voltage too low.
     - Check and adjust voltage.
5. LIGHT TOO BRIGHT.
   - Dimmer switch on "Hi" position.
     - Adjust switch.
   - Voltage too high.
     - Check and adjust voltage.
6. SHORT LAMP LIFE.
   - Voltage too high.
     - Check and adjust voltage.
7. LIGHT BLINKS OR VARIES IN INTENSITY.
   - Lamp contacts corroded.
     - Clean contacts.
   - Intermittent contact in wiring.
     - Check wiring and repair or replace.

Table 3-2. General troubleshooting - continued.

SYMPTOM POSSIBLE CAUSE CORRECTIVE ACTION
8. UNSATISFACTORY LIGHT PATTERN.
Light out of focus.
Adjust focus.
Lamp incorrectly installed into lampholder.
Rotate exhaust tip to point away from the reflector.
9. LIGHT PATTERN NOT ALIGNED WITH PATIENT'S MOUTH.
Mounting post not vertically aligned.
Align mounting post.
10. LIGHT HEAD DRIFTS.
Pivot bushings loose.
Tighten or replace pivot bushings.
Gas spring improperly adjusted.
Adjust or replace spring.
Mounting post not vertically aligned.
Align post.
Friction joints require adjustment.
Tighten set screws.

b. An electrical schematic for voltage troubleshooting is provided in figure 3-4.

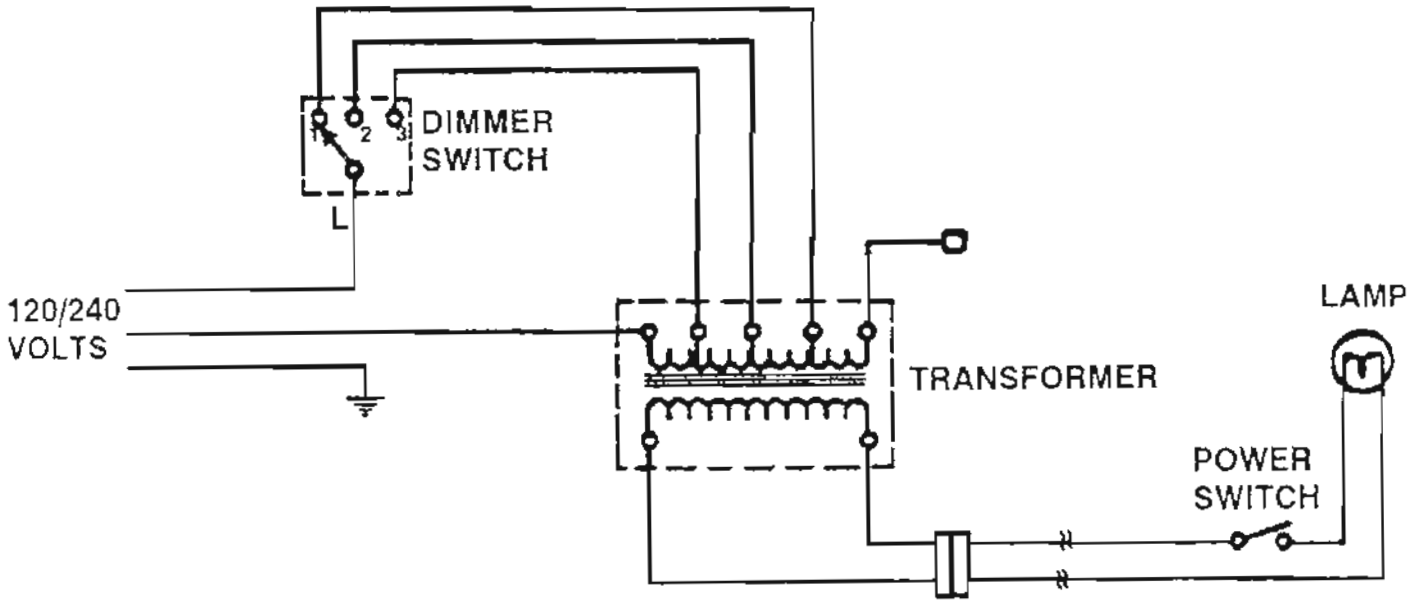

Figure 3-4. Electrical schematic.

Section VIII. MAINTENANCE INSTRUCTIONS

3-17. General.

This section of the manual contains procedures for the performance of maintenance functions.

3-18. Shields.

Refer to figure 3-5.

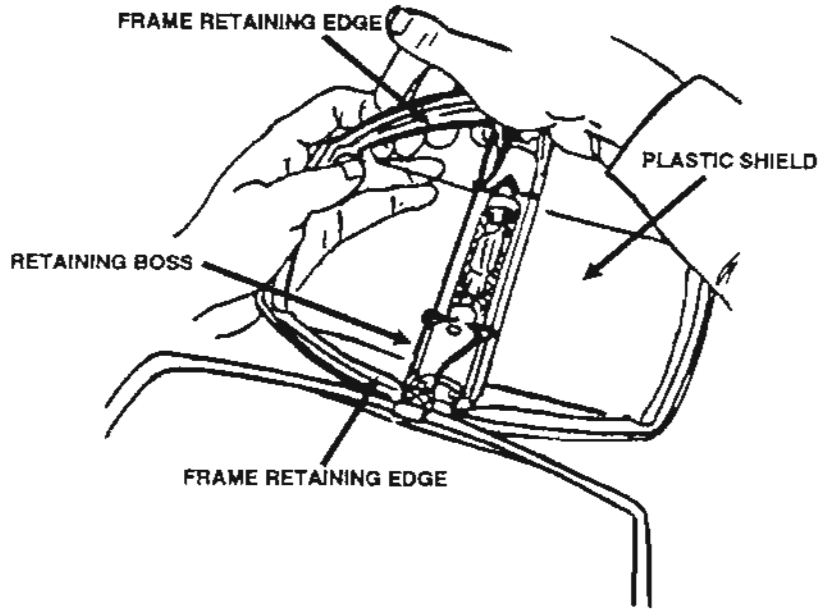

Figure 3-5. Shield removal.

a. Removal.

WARNING

Assure the lamp is cool to avoid burning your fingers.

(1) Open the rear of the light head by depressing the small pin on the side of the light frame.

(2) Gently squeeze one side of a plastic shield until the edge is inside the frame retaining edge.

(3) Remove the shield by pushing it through the rear of the light head.

(4) Repeat the preceding steps for the second shield.

b. Service.

(1) Wash the shields with a mild detergent and lukewarm water.

(2) Dry the shields using a soft cloth.

CAUTION

The plastic shields are unbreakable but may be easily scratched by abrasive material.

c. Installation.

(1) Insert the shield through the rear of the light head.

(2) Place one side of a plastic shield in position behind the frame retaining edge with the shield against the retaining bosses.

(3) Push the opposite side straight downward until the shield snaps into place.

(4) Repeat the preceding steps for the second shield.

(5) Close the rear of the light head.

3-19. Reflector.

Refer to figure 3-6.

a. Open the rear of the light head by depressing the small pin on the side of the light frame.

b. Saturate a clean, lint-free cloth with isopropyl alcohol.

c. Wipe the reflector front with the saturated cloth moving the cloth in one direction.

d. Dry the reflector using another clean, dry, and lint-free cloth with a wiping motion in the same direction as the cleaning step.

WARNING

Do not clean the reflector when it is hot to preclude breakage and/or injury to the servicing individual.

CAUTION

DO NOT use abrasives, chlorine, or ammonia when cleaning the reflector. DO NOT RUB heavily. DO NOT clean at intervals less than semiannually.

e. Clean the rear surface of the reflector using a soft cloth dampened with a mild detergent.

f. Dry the rear surface with a dry, soft cloth.

CAUTION

DO NOT permit the detergent to contact the front surface of the reflector to prevent degradation of the optical coating.

g. Close the rear of the light head.

3-20. Lamp.

Refer to figure 3-6.

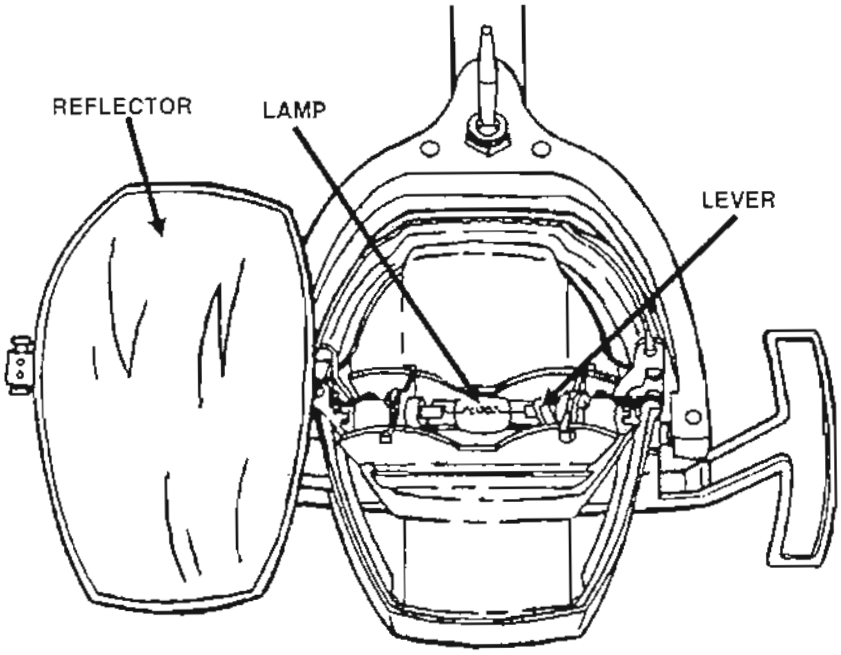

Figure 3-6. Lamp and reflector.

a. Removal.

(1) Open the rear of the light head by depressing the small pin on the side of the light frame.

(2) Rotate the lamp 90 degrees to enable the edge of the lamp to be held with your fingers.

(3) Hold the lamp with your left hand and press the level to the right side with your right hand.

(4) Remove the lamp by gently pulling it out.

b. Installation.

(1) Obtain a replacement lamp.

(2) Clean the lamp with a clean cloth dampened with isopropyl alcohol to remove fingerprints.

(3) Dry the lamp with a clean cloth while holding the lamp with tissue.

(4) Insert the lamp with the exhaust tip away from the reflector.

(5) Close the rear of the light head.

(6) Test the dental light.

3-21. Handles.

Refer to figure 1-3.

a. Removal.

(1) Grasp the handles on both sides while placing your thumbs underneath the locking slides.

(2) Retract the slides by pushing your thumbs outward and lift off the handles.

b. Service.

(1) The handles should be cleaned with a soft cloth and a mild detergent.

(2) The handles will be sterilized (by operator personnel) using steam, dry heat up to 320° F (146° C), radiation, or cold sterilization.

CAUTION

Some cold sterilants may discolor the handles if repeatedly sterilized with this method.

c. Installation.

(1) Grasp the handles on both sides while placing your thumbs underneath the locking slides.

(2) Retract the slides by pushing your thumbs outward, positioning the handles over the frame, and release the locking slides.

3-22. Lamp focus.

Refer to figure 3-7.

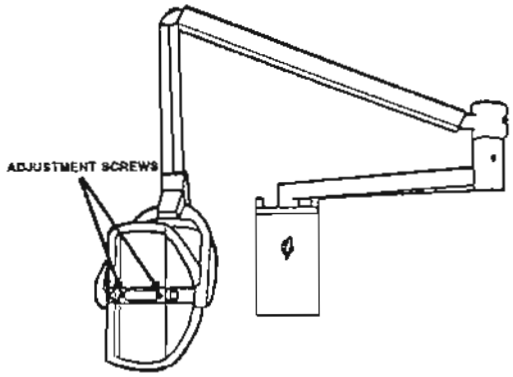

Figure 3-7. Adjustment screws for focusing lamp.

a. Remove the handles by following the procedures in paragraph 3-21a to access the adjustment screws.

NOTE

The light patterns mentioned in the subsequent steps are illustrated in figure 3-8.

b. Turn both screws clockwise until tight. The resultant light patterns are shown in Pattern A.

c. Turn each screw counterclockwise equally one turn at a time until the light patterns are superimposed as shown in Pattern B.

d. Check for the optimum light pattern by blocking out one-half of the light. If the pattern appears to shift, further adjustment of the preceding step is required.

e. If the patterns are irregular as shown in Pattern C, correct by turning only one screw until the patterns are superimposed.

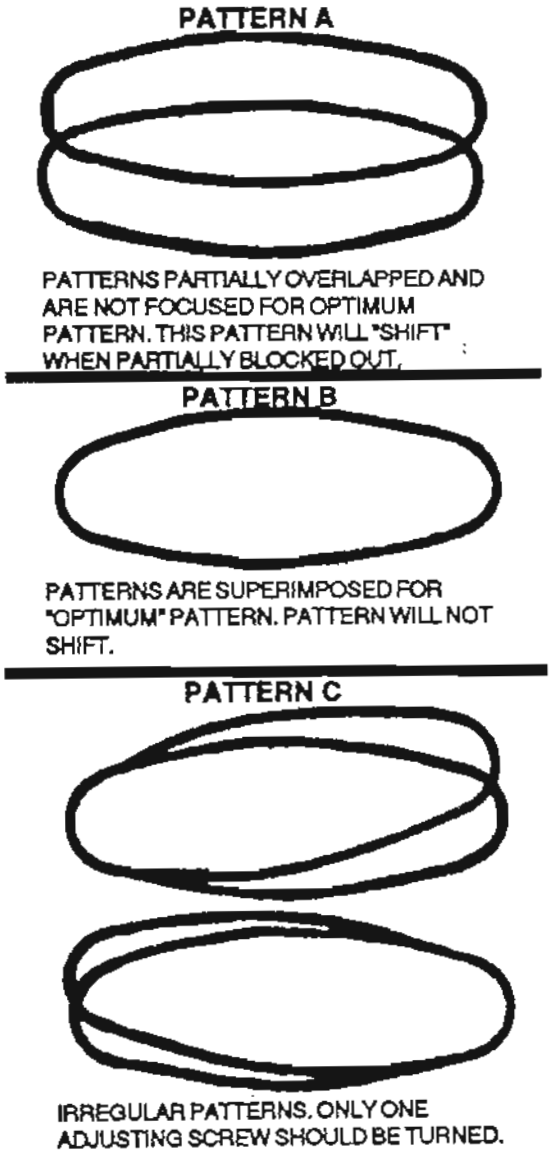

Figure 3-8. Focusing patterns.

3-23. Gas spring.

a. Removal.

(1) Disconnect electrical power from the unit.

(2) Disassemble the light yoke by removing the four screws (fig 3-9).

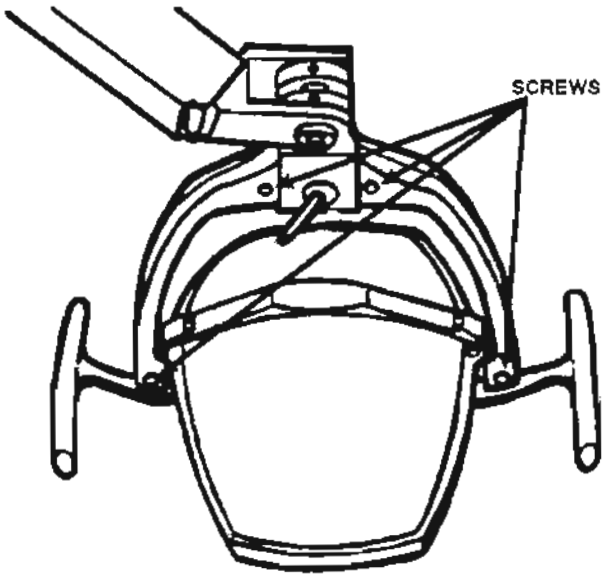

Figure 3-9. Light yoke disassembly.

(3) Remove the two electrical wire nuts from the wires leading from the front arm (fig 3-10).

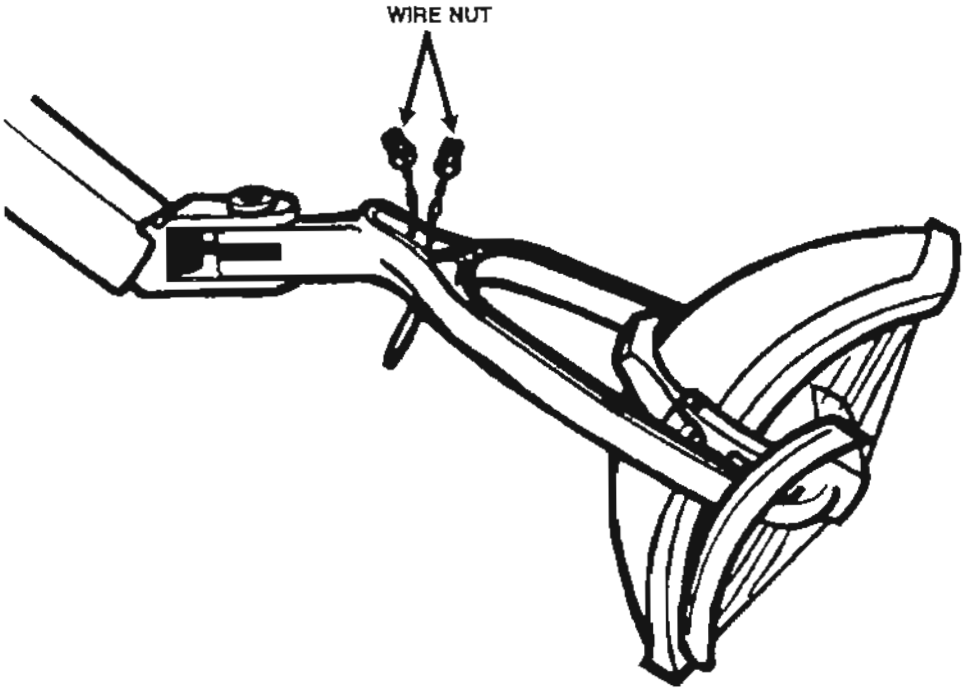

Figure 3-10. Electrical disassembly.

(4) Remove the knuckle cover, pull the electrical wires back through the slot, and remove the plastic sleeve (fig 3-11).

NOTE

Observe the electrical wiring placement closely for the subsequent reassembly.

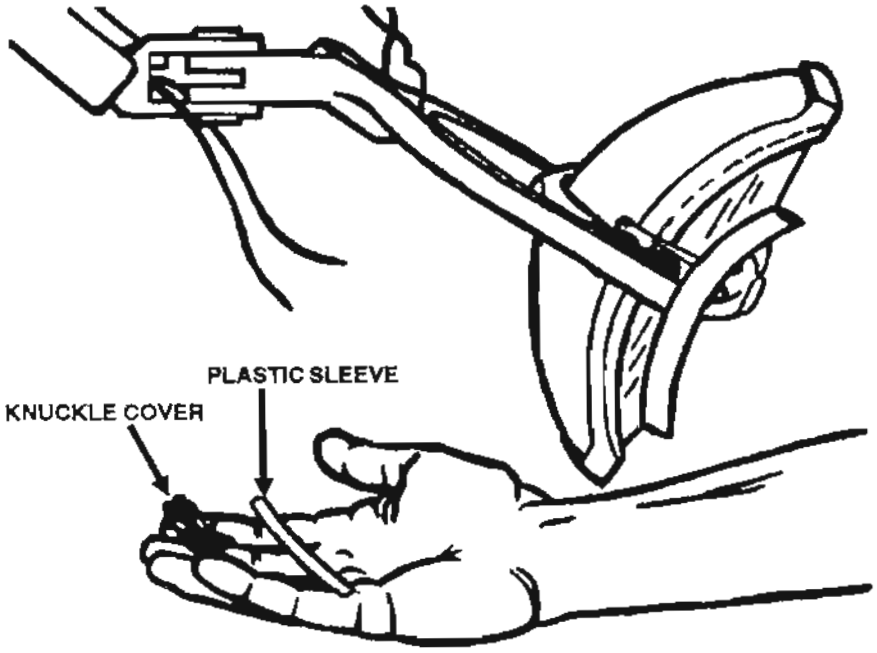

Figure 3-11. Mechanical disassembly.

(5) Remove the position screw and allow the joint to straighten (fig 3-12).

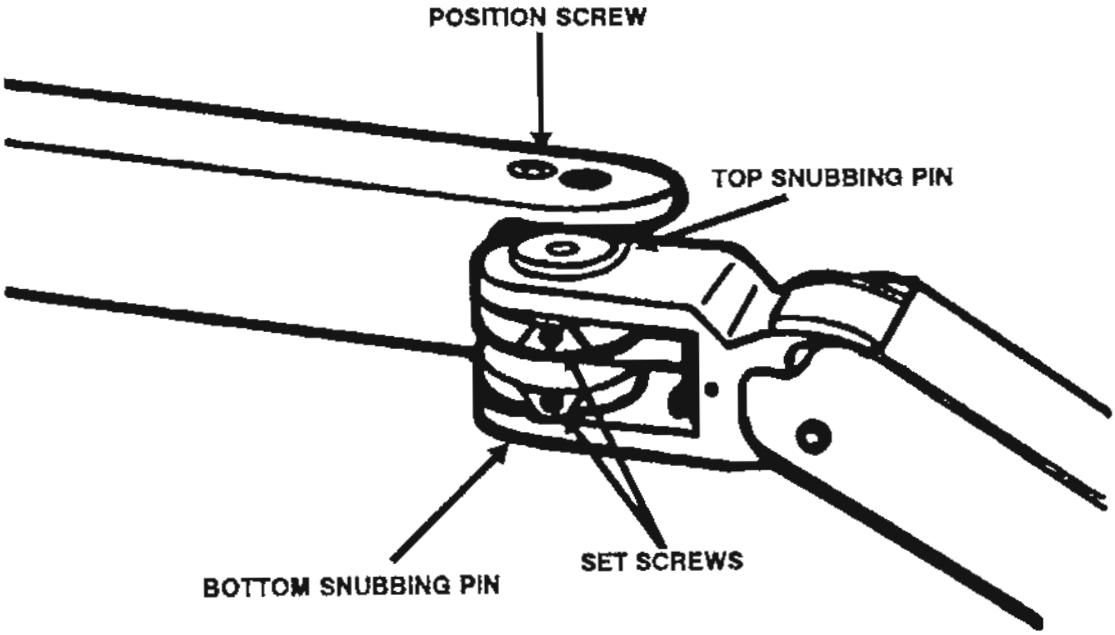

Figure 3-12. Position screw removal.

(6) Pull the electrical wires from the rear arm.

(7) Remove the second knuckle cover and pull the electrical wires from the front arm (fig 3-13).

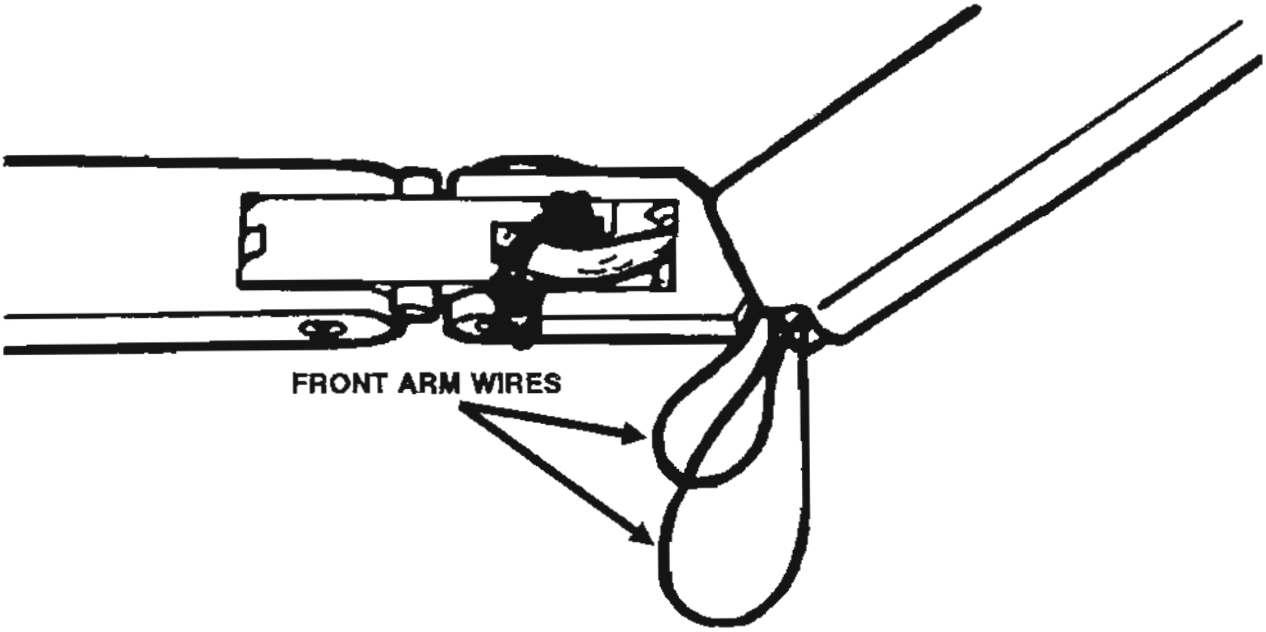

Figure 3-13. Wiring removal.

(8) Loosen the two allen screws by turning them counterclockwise (fig 3-14).

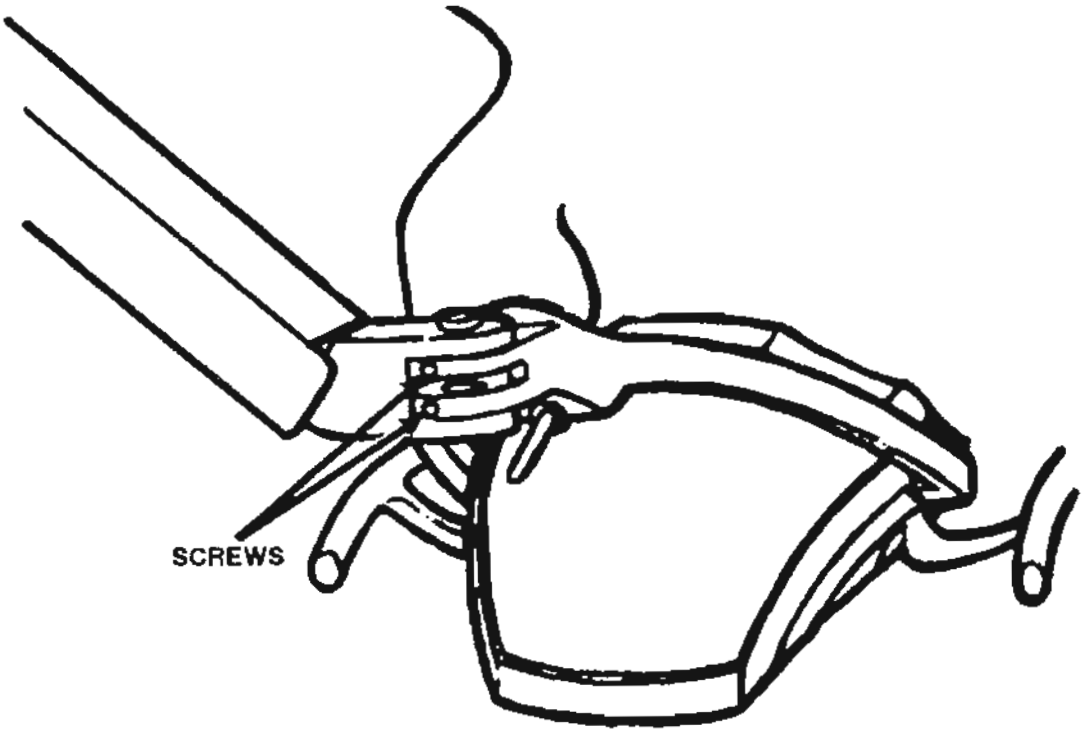

Figure 3-14. Screw removal.

(9) Remove the top and bottom snubbing pins, springs, and washers using an allen or hex wrench and remove the light head (fig 3-15).

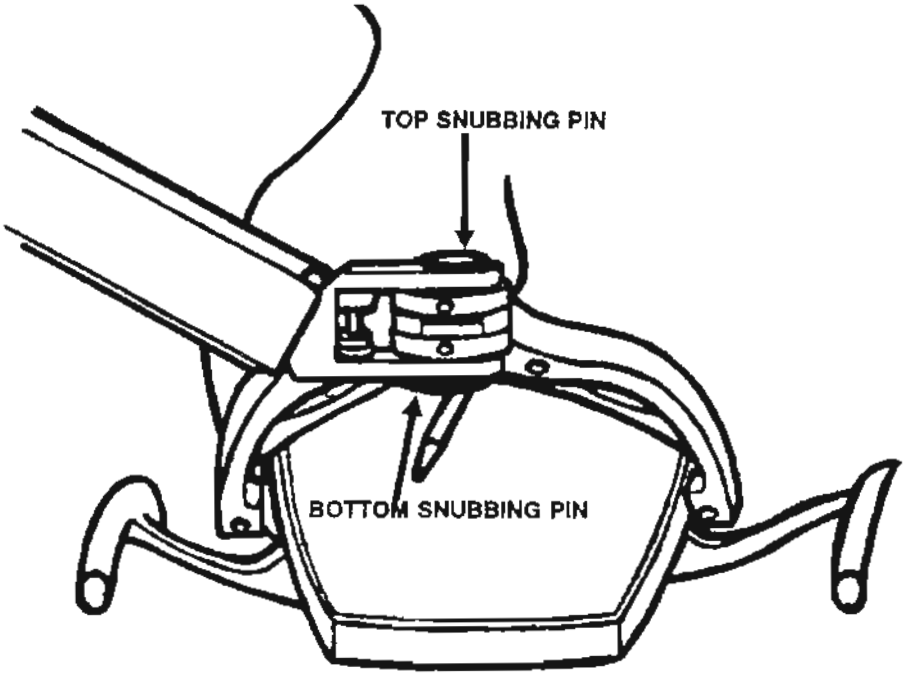

Figure 3-15. Snubbing pin removal.

(10) Insert the special gas tool into the rear of the arm and turn counterclockwise until the pressure is reduced. Turn the tool an additional four full turns (fig 3-16).

WARNING

Assure that pressure has been released from the gas spring to preclude injury.

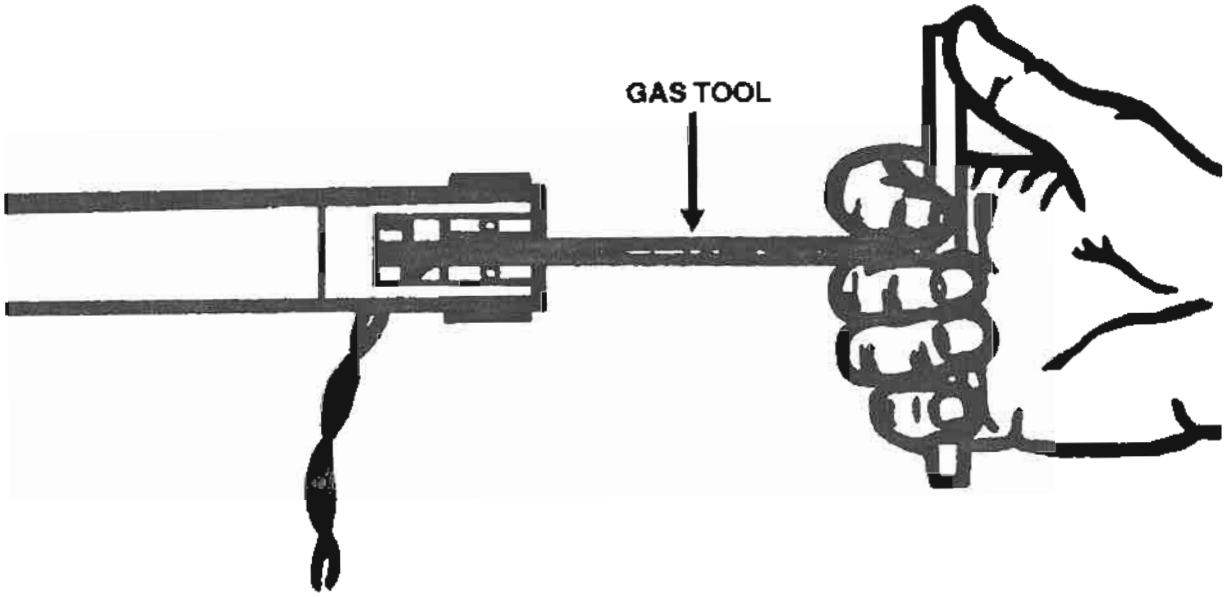

Figure 3-16. Gas tool.

(11) Remove the four screws from the underside of the arm (fig 3-17).

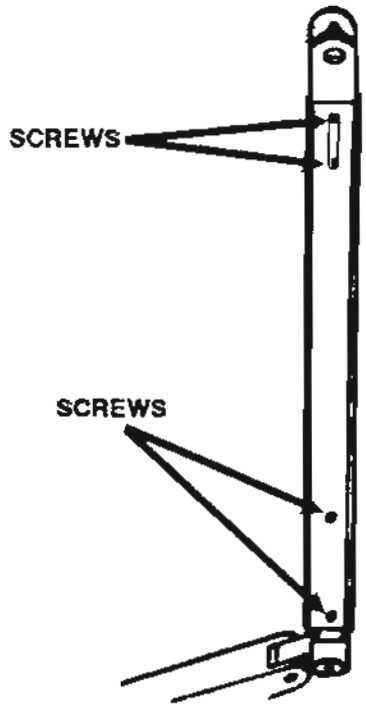

Figure 3-17. Arm disassembly.

(12) Remove the steel pin using a pin punch and remove the knuckle (fig 3-18).

NOTE

The pin is designed to permit removal or insertion in one direction. Push the pin from the flat side.

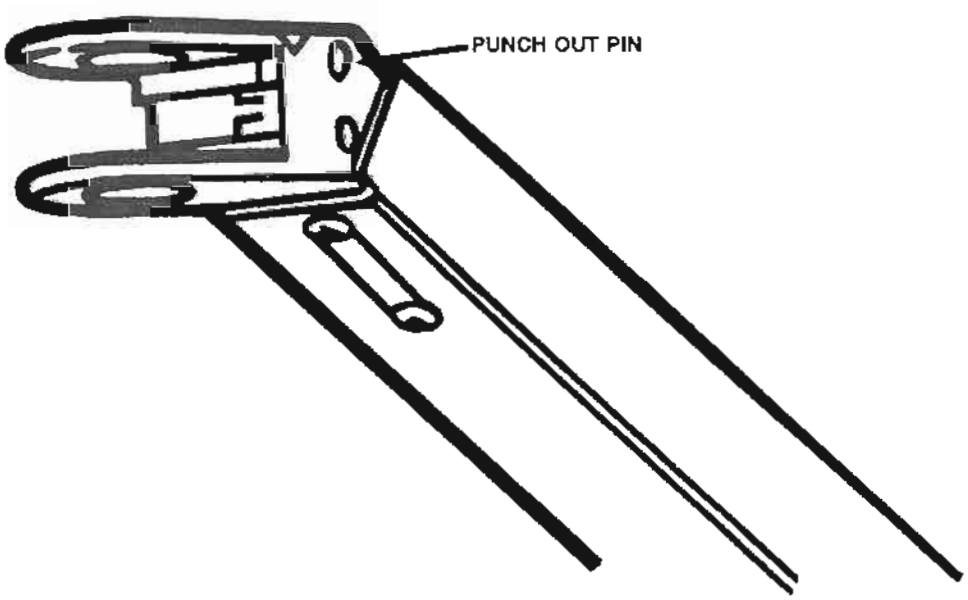

Figure 3-18. Punch out pin.

(13) Remove the slide cover (fig 3-19).

(14) Replace the gas spring.

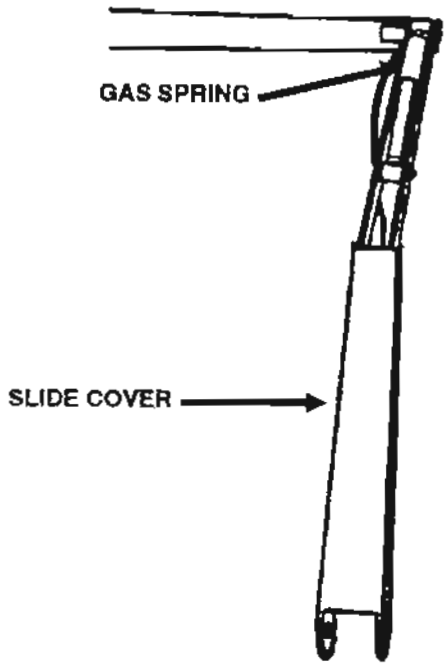

Figure 3-19. Cover removal and gas spring.

b. Installation.

(1) Replace the arm cover knuckle and steel pin. Press the arm down while lifting up on the knuckle to install the two front screws (fig 3-20) and hold the arm up to install the two rear screws (fig 3-21).

NOTE

Tighten all four screws to 40-inch pounds.

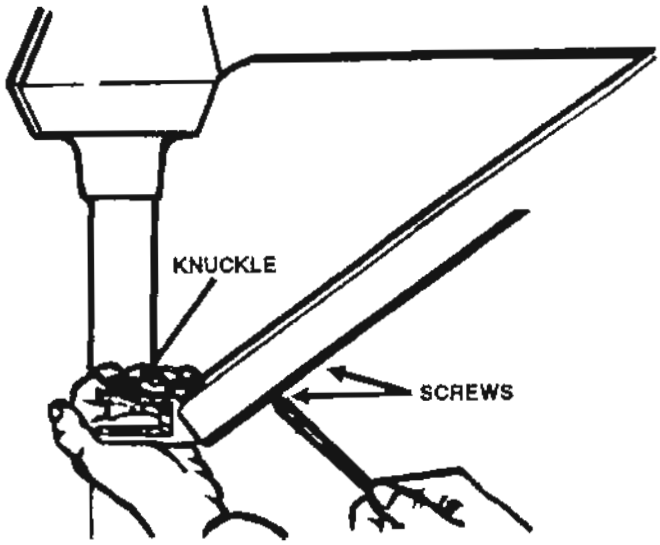

Figure 3-20. Arm cover reassembly (front).

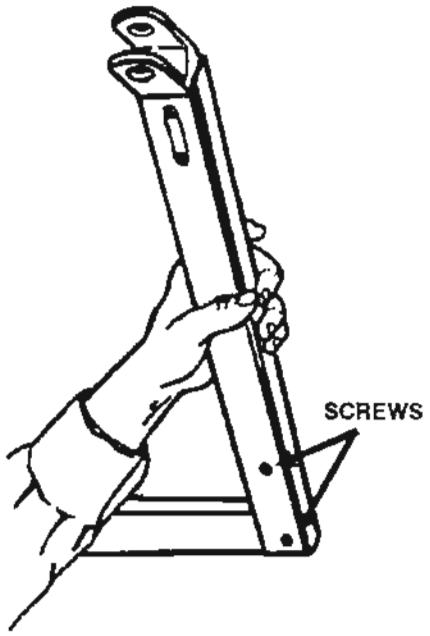

Figure 3-21. Arm cover reassembly (rear).

(2) Insert the special gas tool into the arm rear and turn it 16 revolutions clockwise.

(3) Install the snubbing pins, springs, and washers.

NOTE

The flat side of snubbing pins should face the allen screws.

(4) Place the cap on the yoke and check the balance of the light.

(5) Adjust the gas spring if necessary.

NOTE

Equal force (or up to twice as much downward force) should be required to move the light up or down.

(6) Reinstall wiring.

(7) Replace the knuckle cover.

(8) Reinstall the wiring through the arm and replace the plastic sleeve and the knuckle cover.

(9) Replace the electrical wire nuts.

(10) Assembly the light yoke.

(11) Replace the position screw.

(12) Connect the unit to electrical power.

(13) Test the unit.

3-24. Arms.

The front or rear arm is removed by following the procedures in paragraph 3-23a and stopping when the specific task is completed. Reassembly then follows the procedures in paragraph 3-23b.

Section IX. STORAGE AND SHIPMENT PROCEDURES

3-25. Preparation for storage or shipment.

This section contains the procedures for preparing the dental light for indoor storage and shipment within its container.

a. *Storage procedures.*

(1) Disconnect electrical power from the unit.

(2) Disconnect the electrical extension cord and repack it in the appropriate molded section of the case.

(3) Open the reflector and insert the plastic protective sheet.

(4) Place your shoulder under the arm of the dental light to balance the weight and lift the light head from the top of the upper post.

(5) Pull the electrical cable slowly up through the post.

(6) Carefully set the assembly aside.

(7) Remove the upper post from the lower post.

(8) Remove the two hex nuts, lock washers, and flat washers and place them into the hardware bag.

(9) Remove the four hex cap screws from the chair mount bracket. Place the cap screws into the hardware bag and repack the bag into its molded section of the case.

NOTE

Do not remove the two flathead cap screws from the chair base plate.

(10) Carefully repack the light unit and arm sections into their molded sections of the case.

(11) Repack the lower post and chair mount bracket into their molded sections of the case.

(12) Replace the manuals.

(13) Close the case and tighten all six twist-lock clamps.

b. *Shipment procedures.*

No further action is necessary to prepare the dental light for shipment.

CHAPTER 4

DIRECT SUPPORT AND GENERAL SUPPORT MAINTENANCE

Section I. GENERAL INFORMATION

4-1. Overview.

This chapter provides for the accomplishment of corrective maintenance that is beyond the capability, capacity, and authorization for unit level maintenance personnel. The procedures in this chapter should not be attempted at the unit level.

4-2. Support maintenance services.

Specified components or assembles identified in appendix B, section II, are only authorized for servicing by direct support (DS) and general support (GS) maintenance units.

Section II. TROUBLESHOOTING

4-3. General.

There are no specific troubleshooting procedures at these levels of maintenance.

APPENDIX A

REFERENCES

A-1. Army regulations.

AR 40-61	Medical Logistics Policies and Procedures
AR 710-2	Supply Policy Below the Wholesale Level
AR 725-50	Requisitioning, Receipt, and Issue System
AR 750-1	Army Materiel Maintenance Policy and Retail Maintenance Operations
AR 750-43	Test, Measurement, and Diagnostic Equipment Program

A-2. Technical manual.

TM-DPSC-6500-RPL	Medical Materiel: Medical Repair Parts Reference List

A-3. Technical bulletins.

TB 38-750-2	Maintenance Management Procedures for Medical Equipment
TB 43-180	Calibration and Repair Requirements for the Maintenance of Army Materiel
TB 740-10/DLAM 4155.5/AFR 67-43	Quality Control, Depot Storage Standards, Appendix M, Medical Supplies
TB 750-8-1	Maintenance Expenditure Limits for Medical Materiel: FSC Groups (Medical Only)

A-4. Field manual.

FM 21-11	First Aid for Soldiers

A-5. Supply bulletins.

SB 700-20	Army Adopted/Other Items Selected for Authorization/List of Reportable Items
SB 708-48	Cataloging Handbook H4/H8, Commercial and Government Entity (CAGE) Sections A & B

A-6. Other publications.

(These publications may be obtained from Commander, U.S. Army Medical Materiel Agency, ATTN: SGMMA-M, Frederick, MD 21702-5001.)

Installation and Packing Instructions, Military Field Light Unit, Pelton & Crane

Use and Care Manual, Light Fantastic II, Pelton & Crane

Service Manual, For Models LF11, LFT 11, LFT 11-D, LFC 11, LFC 11-D, LFW 11, and LFL 11, Pelton & Crane

Repair Manual, Light Fantastic II, Pelton & Crane

APPENDIX B

MAINTENANCE ALLOCATION CHART

Section I. INTRODUCTION

B-1. General.

a. This section provides a general explanation of all maintenance and repair functions authorized at various maintenance levels.

b. Section II designates overall responsibility for the performance of maintenance functions on the identified end item or component. The implementation of the maintenance functions upon the end item or component will be consistent with the assigned maintenance levels.

c. Section III lists the tools and test equipment required for each maintenance function as referenced from Section II.

d. Section IV contains supplemental instructions, explanatory notes, and/or illustrations required for a particular maintenance function.

B-2. Explanation of columns in section II.

a. Group Number, Column 1. The assembly group number (Group No.) column is a numerical group assigned to each assembly. The applicable assembly groups are listed in the maintenance allocation chart (MAC) in disassembly sequence beginning with the first assembly removed in a top down disassembly sequence.

b. Assembly Group, Column 2. This column contains a brief description of the components of each assembly group.

c. Maintenance Functions, Column 3. This column lists the various maintenance functions (A through K) and indicates the lowest maintenance level authorized to perform these functions. The symbol designations for the various maintenance levels are as follows:

C - Operator or crew

O - Unit maintenance

F - Direct support maintenance

H - General support maintenance

D - Depot maintenance

The maintenance functions are defined as follows:

A - Inspect. To determine serviceability of an item by comparing its physical, mechanical, and electrical characteristics with established standards.

B - Test. To verify serviceability and to detect electrical or mechanical failure by use of test equipment.

C - Service. To clean, to preserve, to charge, and to add lubricants, cooling agents, and air. If it is desired that elements, such as painting and lubricating, be defined separately, they may be so listed.

D - Adjust. To rectify to the extent necessary to bring into proper operating range.

E - Align. To adjust specified variable elements of an item to bring it to optimum performance.

F - Calibrate. To determine the corrections to be made in the readings of instruments or test equipment used in precise measurement. Consists of the comparison of two instruments, one of which is a certified standard of known accuracy, to detect and adjust any discrepancy in the accuracy of the instrument being compared with the certified standard.

G - Install. To set for use in an operational environment such as tents or International Standards Organization shelters.

H - Replace. To replace unserviceable items with serviceable like items.

I - Repair. Those maintenance operations necessary to restore an item to serviceable condition through correction of material damage to a specific failure. Repair may be accomplished at each level of maintenance.

J - Overhaul. Normally the highest degree of maintenance performed by the Army in order to minimize time work in process consistent with quality and economy of operation. It consists of that maintenance necessary to restore an item to completely serviceable condition as prescribed by a maintenance standard in technical publications for each item of equipment. Overhaul normally does not return an item to like new condition.

K - Rebuild. The highest degree of material maintenance. It consists of restoring equipment as nearly as possible to new condition in accordance with original manufacturing standards. Rebuild is performed only when required by operational considerations or other paramount factors and then only at the depot maintenance level.

d. Tools and Equipment, Column 4. This column is provided for referencing by code, the tools and test equipment (sec III) required to perform the maintenance functions.

e. Remarks, Column 5. This column is provided for referencing by code, the remarks (sec IV) pertinent to the maintenance functions.

B-3. Explanation of columns in section III.

a. Reference Code, Column 1. This column correlates to section II, column 4.

b. Maintenance Level, Column 2. This column identifies the maintenance levels using the tools and test equipment.

c. Nomenclature, Column 3. This column identifies the tools and test equipment.

d. National Stock Number, Column 4. This column provides the national stock number (NSN) of the specific tools or test equipment.

B-4. Explanation of columns in section IV.

a. Reference Code, Column 1. This column correlates to section II, column 5.

b. Remarks, Column 2. This column provides supplemental information or explanatory notes pertinent to the maintenance function in section II.

Section II. MAINTENANCE ALLOCATION CHART FOR DENTAL LIGHT

(1) GROUP NO.	(2) ASSEMBLY GROUP	(3) MAINTENANCE FUNCTIONS A	B	C	D	E	F	G	H	I	J	K	(4) TOOLS AND EQUIPMENT	(5) REMARKS
00	Dental Light	O 0.3	O 0.5	O 0.3	O	O 0.2	O	O 0.5	O	O	F 3.0	D 6.0	01,02,03,04, 05	CODE A,B
01	Mounting System												01,02,03	CODE A
011	Bracket							O 0.5						
012	Posts	O 0.2		O 0.2		O 0.3		O 0.2	O 0.1	O 0.3				
02	Electrical System												01,02,04,05	CODE A,B
021	Line Cord	O 0.1	O 0.2						O 0.1	O 0.2				
022	Dimmer Switch	O 0.1	O 0.1						O 0.4	O 0.6				
023	Transformer	O 0.1	O 0.2						O 0.5	O 0.4				
024	Lampholder	O 0.1	O 0.2						O 0.4					
025	Lamp	O 0.2	O 0.3			O 0.2			O 0.3					
026	Switch	O 0.2	O 0.3						O 0.5					
03	Light Head Assembly												01,02,03, 04,05,06	CODE A,B
031	Shields	O 0.2							O 0.2					
032	Reflector	O 0.2		O 0.4					O 0.5					
04	Arm Assemblies												01,02,03	CODE A
041	Covers	O 0.3							O 0.4	O 0.4				

Section II. MAINTENANCE ALLOCATION CHART FOR DENTAL LIGHT

(1) GROUP NO.	(2) ASSEMBLY GROUP	(3) MAINTENANCE FUNCTIONS											(4) TOOLS AND EQUIPMENT	(5) REMARKS
		A	B	C	D	E	F	G	H	I	J	K		
042	Gas Spring	O 0.3							O 1.5					
043	Knuckles	O 0.2							O 1.0					

Section III. TOOLS AND TEST EQUIPMENT FOR DENTAL LIGHT

(1) REFERENCE CODE	(2) MAINTENANCE LEVEL	(3) NOMENCLATURE	(4) NATIONAL STOCK NUMBER
01	O,F,H,D	Tool Kit, Medical Equipment Maintenance and Repair: Repairmans	5180-00-611-7923
02	O,F,H,D	Tool Kit, Medical Equipment Maintenance and Repair: Organizational	5180-00-611-7924
03	F,H	Shop Equipment, Medical Maintenance: Depot (MEDSOM) Maintenance	4940-00-594-6455
04	O,F,H,D	Multimeter, AN/USM 486	6625-01-145-2430
		or	
		Multimeter, AN/PSM 45A	6625-01-265-6000
05	O,F,H,D	Tester, Current Leakage	6625-01-142-8233

Section IV. REMARKS FOR DENTAL LIGHT

(1) REFERENCE CODE	(2) REMARKS
A	Tools and test equipment are listed for each assembly group.
B	Perform an annual electrical safety inspection and test. Perform the inspection and test after repair or replacement of electrical components .

APPENDIX C

COMPONENTS OF END ITEM AND BASIC ISSUE ITEMS LIST

Section I. INTRODUCTION

C-1. Scope.

This appendix lists components of end item and basic issue items for the dental light to help you inventory items required for safe and efficient operation.

C-2. General.

The Components of End Item and Basic Issue Items lists are divided into the following sections.

a. Section II. Components of End Item. These items are part of the end item, but are removed and separately packaged for transportation or shipment. As part of the end item, these items must be with the end item whenever it is issued or transferred between property accounts.

b. Section III. Basic Issue Items. These are the minimum essential items required to place the dental light in operation, to operate it, and to perform emergency repairs. Basic issue items must be with the dental light during operation and whenever it is transferred between property accounts. This manual is your authority to request or requisition basic issue items, based on MTOE authorization of the end item.

C-3. Explanation of columns.

The following provides an explanation of columns found in both listings:

a. Item Number, Column 1. This column indicates the item number assigned to the item.

b. National Stock Number, Column 2. This column indicates the national stock number assigned to the item.

c. Description, Column 3. This column indicates the federal item name and, if required, a minimum description to identify and locate the item. The last line for each item indicates the commercial and government entity (CAGE) code in parentheses followed by the part number.

d. Unit of Measure, Column 4. This column indicates the unit of measure used in performing the actual operational or maintenance function. This measure is expressed by a two-character alphabetical abbreviation. These abbreviations are listed in the glossary.

e. Quantity, Column 5. This column indicates the quantity (QTY) of the item(s) to be used with or on the equipment.

Section II. COMPONENTS OF END ITEM FOR DENTAL LIGHT

(1) ITEM NUMBER	(2) NATIONAL STOCK NUMBER	(3) DESCRIPTION	(4) UNIT OF MEASURE	(5) QTY
1		Packing Container (46308) HB3-019594	EA	1
2		Insert, Protective (46308) HB3-019595	EA	1
3		Bracket, Chair Mount (46308) RA5-019419	EA	1
4		Cord, Extension (46308) HB3-019596	EA	1
5		Screw, Cap, Hex Head (46308) XD1-090204	EA	4

Section III. BASIC ISSUE ITEMS FOR DENTAL LIGHT

(1) ITEM NUMBER	(2) NATIONAL STOCK NUMBER	(3) DESCRIPTION	(4) UNIT OF MEASURE	(5) QTY
1		Wrench, Key, Hexagonal, 3/16 in. (46308) YS1-019599	EA	2
2		Wrench, Key, Hexagonal, 7/32 in. (46308) YS1-092680	EA	2
3		Wrench, Open End/Box End, 9/16 in. (46308) YS1-092681	EA	2
4		Military Light Instructions - LF II (46308) YL2-096620	EA	2
5		LF II Installation and Adjustment Manual (46308) YL3-096035	EA	2
6		LF II Use and Care Manual (46308) YL3-096037	EA	2
7		LF II Parts List (46308) YL8-096064	EA	2
8		LF II Repair Manual (46308) YL8-096065	EA	2
9		Military Dental Light Template (46308) YL9-096645	EA	1

APPENDIX D

EXPENDABLE AND DURABLE SUPPLIES AND MATERIALS LIST

Section I. INTRODUCTION

D-1. Scope.

This appendix lists expendable and durable supplies and materials that are required to maintain the equipment. This listing is authorization to requisition and retain the items if not otherwise authorized.

D-2. Explanation of columns.

a. Item Number, Column 1. The item number (Item No.) is sequentially assigned.

b. Level, Column 2. This column identifies the lowest level of maintenance that requires the listed item. An explanation of the alphabetical character is provided in appendix B, section I of this manual.

c. National Stock Number, Column 3. This column indicates the national stock number assigned to the item.

d. Description, Column 4. This column indicates the federal item name and, if required, a minimum description to identify and locate the item. The last line for each item indicates the CAGE code in parentheses followed by the part number.

e. Unit of Measure, Column 5. This column indicates the unit of measure used in performing the actual operational or maintenance function. This measure is expressed by a two-character alphabetical abbreviation. These abbreviations are listed in the glossary.

f. Quantity, Column 6. This column indicates the quantity (QTY) of the item(s) to be used with or on the equipment.

Section II. EXPENDABLE AND DURABLE SUPPLIES AND MATERIALS LIST FOR DENTAL LIGHT

(1) ITEM NO.	(2) LEVEL	(3) NATIONAL STOCK NUMBER	(4) DESCRIPTION	(5) UNIT OF MEASURE	(6) QTY
1	O	7920-01-004-7847	Cloth, Cleaning (97327) Rymple Cloth 301	RO	1
2	O	6850-00-110-4498	Cleaning Compound (81348) PD680	PT	1
3	O	7920-00-543-7148	Brush, Dusting (81348) HB00190	EA	1
4	O	7930-00-926-5171	Polish, Stainless Steel (81348) P-C-1121	PT	1
5	O	6505-00-655-8366	Alcohol, Isopropyl	PT	1
6	O	9150-00-252-6173	Oil, Lubricating	CN	1
7	O		Cleaning Kit, Reflector (46308) HB9-017134	EA	1
8	O		Cleaning Kit, Reflector (46308) HB9-017597	CS	AR
9	O	5970-00-419-4290	Tape, Electrical	RO	1

APPENDIX E

REPAIR PARTS AND SPECIAL TOOLS LIST

Section I. INTRODUCTION

E-1. Scope.

This manual lists spare and repair parts, special tools, special test equipment; and other special support equipment required for the performance of unit level, direct support, general support, and depot level maintenance. It authorizes the requisitioning and issue of spare and repair parts in consonance with the MAC (app B).

E-2. General.

The Repair Parts and Special Tools List is divided into the following sections:

a. Repair Parts, Section II. A list of repair parts authorized for the performance of maintenance in figure number and item number sequence.

b. Special Tools, Test, and Support Equipment, Section III. A list of special tools, test, and support equipment authorized for the performance of maintenance.

E-3. Explanation of columns in section II.

a. Illustration, Column 1.

(1) *Figure Number.* This column indicates the figure number (Fig No.) of the illustration on which the item is shown.

(2) *Item Number.* This column indicates the item number (Item No.) used to identify each item on the illustration.

b. National Stock Number, Column 2. This column indicates the national stock number assigned to the item.

c. Description, Column 3. This column indicates the federal item name of the item. The last line for each item indicates the CAGE code in parentheses followed by the part number.

d. Unit of Measure, Column 4. This column indicates the unit of measure used in performing the actual operational or maintenance function. This measure is expressed by a two-character alphabetical abbreviation.

e. Quantity, Column 5. This column indicates the quantity (QTY) of the item(s) to be used with or on the illustrated component, assembly, module, or end item.

E-4. Explanation of columns in section III.

a. Item Number, Column 1. This number is sequentially assigned.

b. Level, Column 2. This column identifies the lowest level of maintenance that requires the listed item. An explanation of the alphabetical character is provided in appendix B, section I of this manual.

c. National Stock Number, Column 3. This column indicates the national stock number assigned to the item.

d. Description, Column 4. This column indicates the federal item name and, if required, a minimum description to identify and locate the item. The last line for each item indicates the CAGE code in parentheses followed by the part number.

e. Unit of Measure, Column 5. This column indicates the unit of measure used in performing the actual operational or maintenance function. This measure is expressed by a two-character alphabetical abbreviation.

f. Quantity, Column 6. This column indicates the quantity (QTY) of the item(s) to be used with or on the equipment.

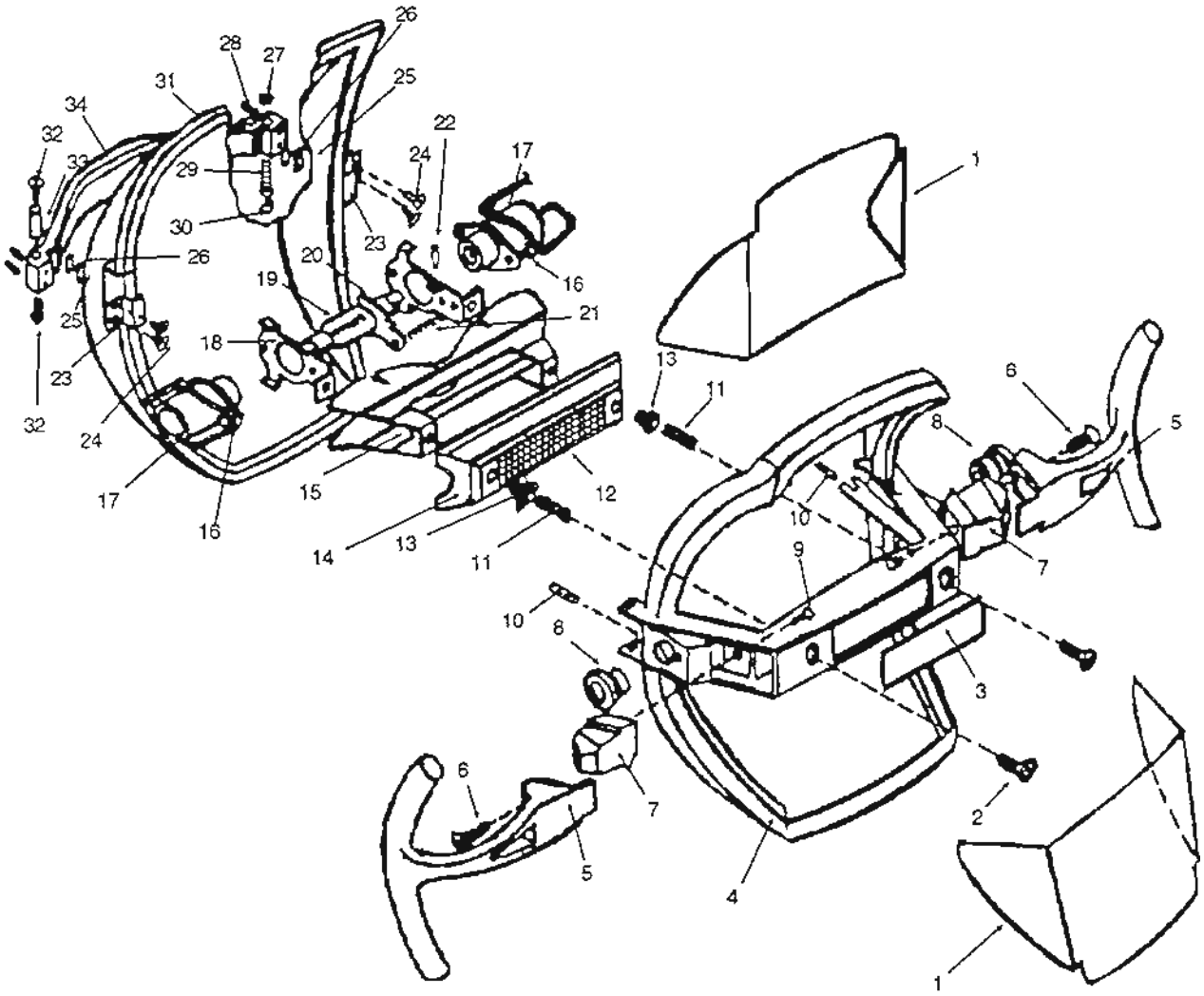

Figure E-1. Light head assembly.

Section II. REPAIR PARTS LIST FOR DENTAL LIGHT

(1) ILLUSTRATION		(2) NATIONAL STOCK NUMBER	(3) DESCRIPTION	(4) UNIT OF MEASURE	(5) QTY
FIG NO.	ITEM NO.				
E-1	1		Shield (46308)HB5-015310	EA	2
E-1	2		Screw, 6-32 by 3/4 in., Phillips Oval Head (46308)XD1-090642	EA	2
E-1	3		Logo (46308)HB3-017206	EA	1
E-1	4		Frame and Cushion Assembly (46308)HB6-016753	EA	1
E-1	5		Handle (46308)HB4-015314	EA	2
E-1	6		Screw, 10-24 by 5/8 in., Phillips Oval Heal (46308)XD1-090704	EA	2
E-1	7		Insulator (46308)HB4-015565	EA	2
E-1	8		Pivot, Reflector (46308)HB3-014901	EA	2
E-1	9		Screw, 10-24 by 1/2 in., Phillips Flat Head (46308)XD1-090648	EA	2
E-1	10		Screw, 10-32 by 1/4 in., Hex Socket (46308)XD1-090253	EA	2
E-1	11		Spring, Focus (46308)HB2-015160	EA	2
E-1	12		Screen (46308)HB5-014893	EA	1
E-1	13		Adapter, Screw (46308)HB5-014890	EA	2
E-1	14		Shield, Outer (46308)HB5-014894	EA	1
E-1	15		Shield, Inner (46308)HB5-014892	EA	1
E-1	16		Screw, 6-32 by 1/8 in., Round Head (46308)XE1-090428	EA	2

Section II. REPAIR PARTS LIST FOR DENTAL LIGHT

(1) ILLUSTRATION		(2) NATIONAL STOCK NUMBER	(3) DESCRIPTION	(4) UNIT OF MEASURE	(5) QTY
FIG NO.	ITEM NO.				
E-1	17	6520-01-315-4619	Lamp Socket, Dental (46308)HB3-015208	EA	2
E-1	18		Holder, Socket (46308)HB5-014891	EA	2
E-1	19	6520-01-315-3387	Lamp (Replacement Kit) (46308)HB9-017133	KT	1
E-1	20		Lever, Lamp Removal (46308)HB5-015577	EA	1
E-1	21		Spring, Lamp Removal (46308)HB2-015597	EA	1
E-1	22		Roll Pin (46308)HB2-016115	EA	1
E-1	23		Clamp, Reflector (46308)HB5-015863	EA	2
E-1	24		Screw, 6-32 by 3/16 in., Phillips Pan Head (46308)XD1-090679	EA	4
E-1	25		Reflector, Cushion (46308)HB5-015899	EA	2
E-1	26		Pad, Pressure (46308)HB5-015458	EA	2
E-1	27		Ring, Retaining (46308)HB2-015503	EA	2
E-1	28		Screw, 6-32 by 5/16 in., Socket Set (46308)XD1-090245	EA	2
E-1	29		Spring, Release (46308)HB2-015505	EA	2
E-1	30		Pin (46308)HB5-014707	EA	2
E-1	31	6520-01-149-8142	Reflector (46308)BH3-014062	EA	1
E-1	32		Screw, 6-32 by 7/16 in., Phillips Round Head (46308)XD1-090171	EA	2

Section II. REPAIR PARTS LIST FOR DENTAL LIGHT

(1) ILLUSTRATION		(2) NATIONAL STOCK NUMBER	(3) DESCRIPTION	(4) UNIT OF MEASURE	(5) QTY
FIG NO.	ITEM NO.				
E-1	33		Pin (46308)HB5-015224	EA	2
E-1	34		Guard, Glass (46308)HB4-015861	EA	1
E-1	N/A		Light Head Assembly (46308)HB6-017741	EA	1

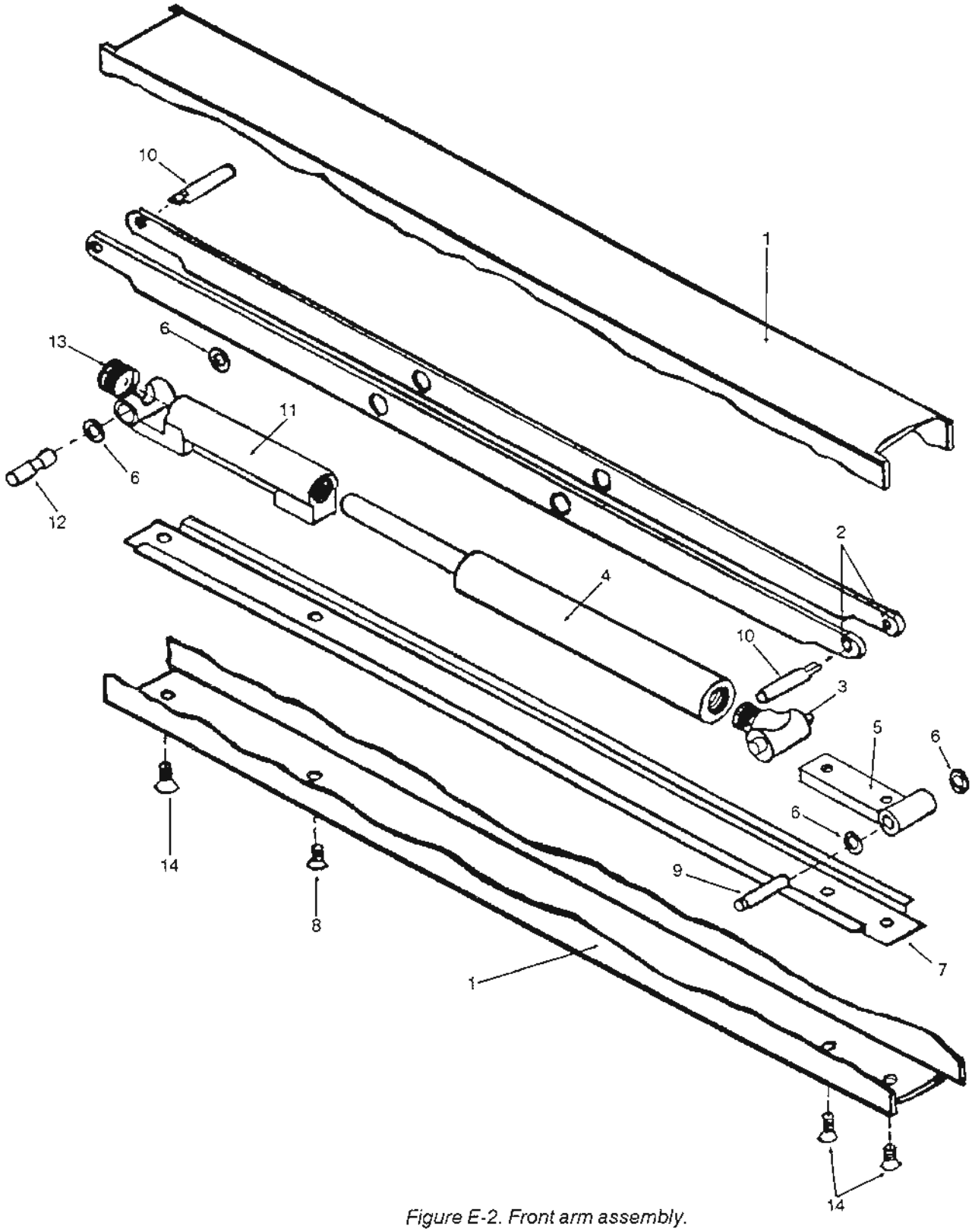

Figure E-2. Front arm assembly.

Section II. REPAIR PARTS LIST FOR DENTAL LIGHT

(1) ILLUSTRATION		(2) NATIONAL STOCK NUMBER	(3) DESCRIPTION	(4) UNIT OF MEASURE	(5) QTY
FIG NO.	ITEM NO.				
E-2	1		Front Arm (46308)HB5-014527	EA	1
E-2	2		Tie Bar (46308)HB5-014537	EA	2
E-2	3		Anchor, Gas Spring (46308)HB3-014134	EA	1
E-2	4		Gas Spring (46308)HB9-017185	EA	1
E-2	5		Support, Front Knuckle (46308)HB6-015805	EA	1
E-2	6		Spacer (46308)HB3-014535	EA	4
E-2	7		Raceway (46308)HB5-014528	EA	1
E-2	8		Screw, 10-24 by 3/8 in., Flathead, Socket Cap (46308)XD1-090721	EA	1
E-2	9		Pin, Pivot, Lower Front (46308)HB3-014531	EA	1
E-2	10		Pin, Pivot, Upper (46308)HB5-014533	EA	2
E-2	11		Support, Rear Knuckle (46308)HB6-015806	EA	1
E-2	12		Pin, Pivot, Lower Rear (46308)HB5-014532	EA	1
E-2	13		Screw, 5/8-11 by 5/8in., Socket Set (46308)XD1-090650	EA	1
E-2	14		Screw, 10-24 by 1/2 in., Flat Head, Hex Socket Cap (46308)XD1-090191	EA	3

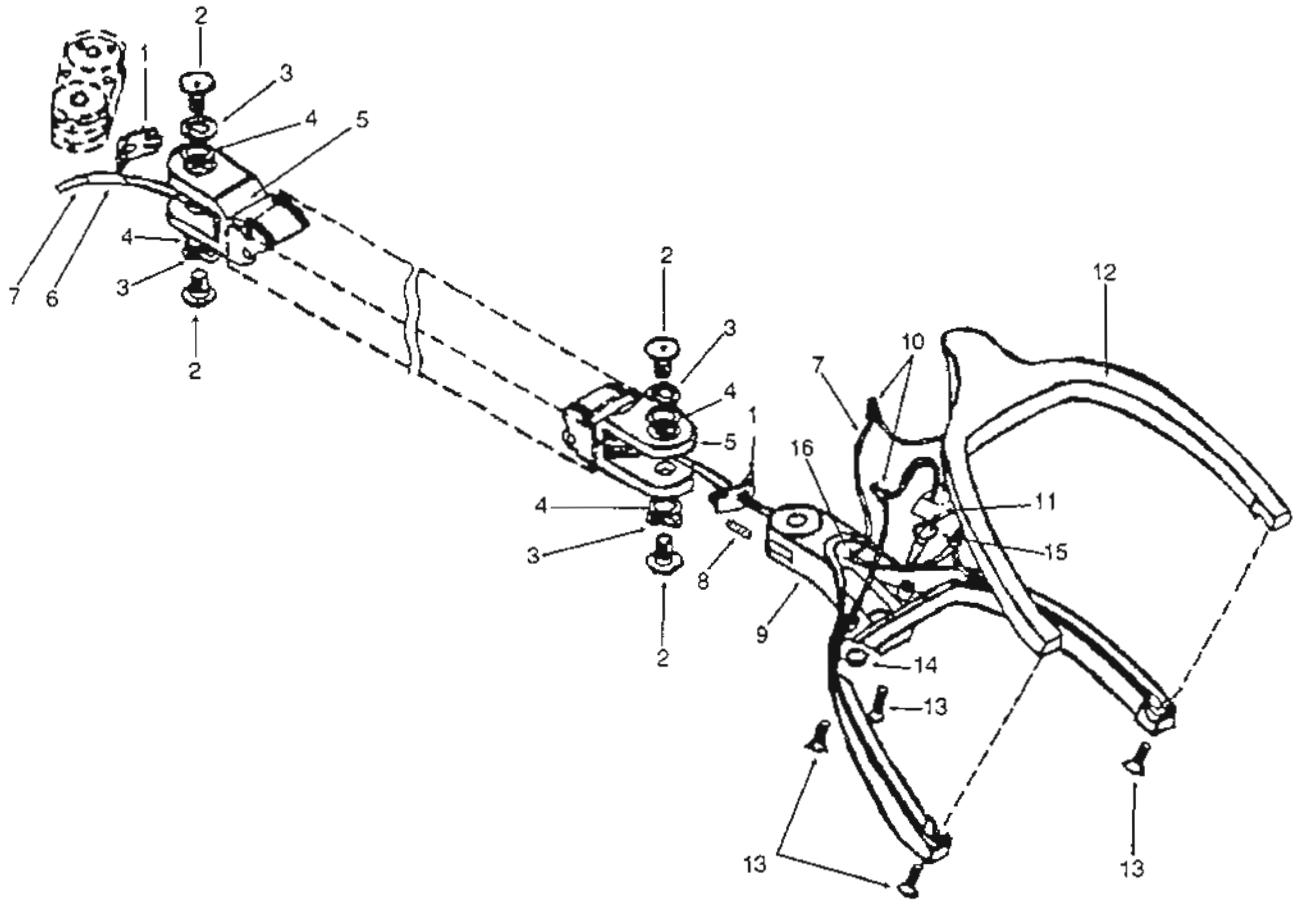

Figure E-3. Front arm assemblies and yoke.

Section II. REPAIR PARTS LIST FOR DENTAL LIGHT

(1) ILLUSTRATION FIG NO.	(1) ILLUSTRATION ITEM NO.	(2) NATIONAL STOCK NUMBER	(3) DESCRIPTION	(4) UNIT OF MEASURE	(5) QTY
E-3	1		Cover, Knuckle (46308)HB3-014133	EA	2
E-3	2		Pin, Snubbing (46308)HB4-016705	EA	4
E-3	3		Washer (46308)HB2-017186	EA	4
E-3	4		Washer (46308)HB5-016189	EA	4
E-3	5		Knuckle, Straight (46308)HB6-015809	EA	2
E-3	6		Insulator, Wire (46308)H35-006749	EA	1
E-3	7		Wiring Harness (46308)HB6-015766	EA	2
E-3	8		Screw, 10-32 by 1/2 in., Hex Head Socket (46308)XD1-090645	EA	1
E-3	9		Body, Yoke (46308)HB4-014524	EA	1
E-3	10		Connector, Wire Nut (46308)H32-010822	EA	2
E-3	11	6520-01-315-4620	Switch Assembly (46308)H66-007096	EA	1
E-3	12		Cap, Yoke (46308)HB4-014523	EA	1
E-3	13		Screw, 8-32 by 3/4 in., Phillips Oval Head (46308)XD1-090643	EA	4
E-3	14		Nut, Knurled (46308)H45-006849	EA	1
E-3	15		Washer, Lock (46308)XB3-090052	EA	1
E-3	16		Insulator, Wire (46308)HB5-015900	EA	1

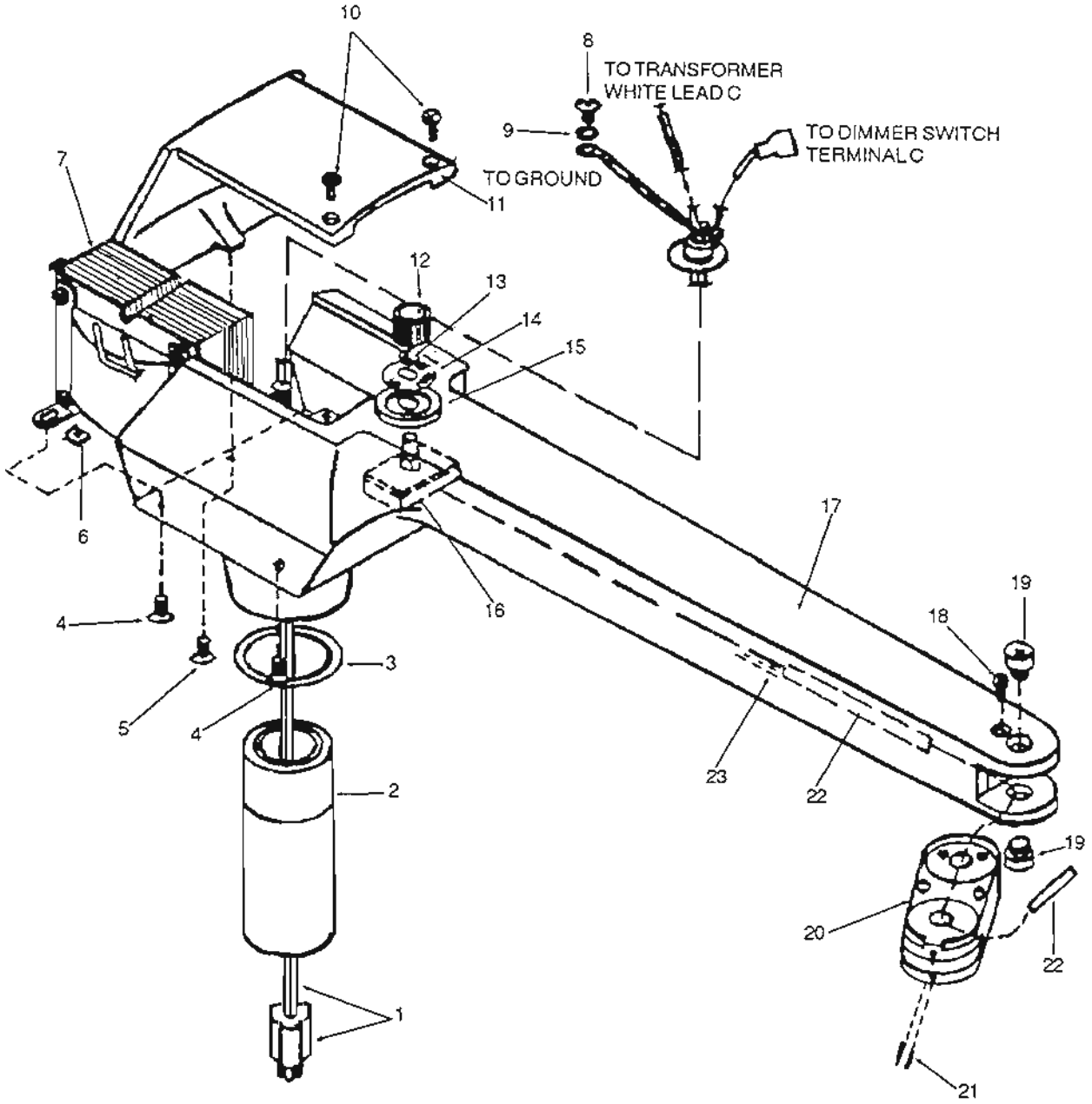

Figure E-4. Rear arm.

Section II. REPAIR PARTS LIST FOR DENTAL LIGHT

(1) ILLUSTRATION FIG NO.	(1) ILLUSTRATION ITEM NO.	(2) NATIONAL STOCK NUMBER	(3) DESCRIPTION	(4) UNIT OF MEASURE	(5) QTY
E-4	1		Cord and Bushing (46308)HB6-015767	EA	1
E-4	2		Adapter, Rear Arm (46308)HB6-006766	EA	1
E-4	3		Spacer (46308)H35-006763	EA	1
E-4	4		Screw, 8-32 by 3/4 in., Phillips Oval Head (46308)XD1-090643	EA	2
E-4	5		Screw, 6-32 by 3/8 in., Phillips Pan Head (46308)XD1-090723	EA	2
E-4	6		Nut, Speed (46308)HB2-015774	EA	2
E-4	7	5950-01-154-2158	Transformer, Power, 117 Volts (46308)HB3-015768	EA	1
			or		
			Transformer, Power, 230 Volts (46308)HB3-016031	EA	1
E-4	8		Screw, 10-32 by 1/4 in., Round Head (46308)XD1-090110	EA	1
E-4	9		Washer, Lock, 0.2 ID by 0.37 OD by 0.02, Internal, Shakeproof (46308)XD3-090380	EA	1
E-4	10		Screw, 6-32 by 3/8 in., Phillips Oval Head (46308)XD1-090641	EA	4
E-4	11		Cap, End (46308)HB4-014899	EA	1
E-4	12		Knob, Dimmer Switch (46308)HB2-015408	EA	1
E-4	13		Nut, Hex (46308)H32-006685	EA	1
E-4	14		Label, Dimmer Switch (46308)HB3-014999	EA	1

Section II. REPAIR PARTS LIST FOR DENTAL LIGHT

(1) ILLUSTRATION		(2) NATIONAL STOCK NUMBER	(3) DESCRIPTION	(4) UNIT OF MEASURE	(5) QTY
FIG NO.	ITEM NO.				
E-4	15		Bezel (46308)HB3-015865	EA	1
E-4	16	6530-01-154-2092	Switch (46308)H63-013553	EA	1
E-4	17		Arm, Rear (46308)HB4-014941	EA	1
E-4	18		Screw, 10-24 by 1/2 in., Flat Head, Hex Socket Cap (46308)XD1-090191	EA	1
E-4	19		Screw, Hinge (46308)HB3-015108	EA	2
E-4	20		Adapter, Arm (46308)HB4-014530	EA	1
E-4	21		Screw, 10-32 by 1/2 in., Hex Socket Set (46308)XD1-090645	EA	2
E-4	22		Insulator, Wire (46308)H35-006749	EA	1
E-4	23		Wiring Harness, Transformer/Yoke (46308)HB6-015766	EA	1

Section III. SPECIAL TOOLS, TEST, AND SUPPORT EQUIPMENT FOR DENTAL LIGHT

(1) ITEM NO.	(2) LEVEL	(3) NATIONAL STOCK NUMBER	(4) DESCRIPTION	(5) UNIT OF MEASURE	(6) QTY
1	O		Wrench Assembly, Allen (Gas Tool) (46308) 016749	EA	1
1	D		Wrench, Torque (1CV05) 6065-4	EA	1

GLOSSARY

AR	As required.
BLK	Black.
BLU	Blue.
BRN	Brown.
BX	Box.
C	Operator maintenance.
CAGE	Commercial and government entity.
cm	Centimeter.
CN	Can.
CS	Case.
D	Depot level maintenance.
°C	Degrees Celsius.
°F	Degrees Fahrenheit.
°K	Degrees Kelvin.
dia	Diameter.
DS	Direct support.
EA	Each.
F	Direct support maintenance.
fc	Footcandle(s).
fig	Figure.
FIG. NO.	Figure number.
FSCM	Federal supply code for manufacturers. (Obsolete term; see CAGE).
ft	Foot (feet).
GRY	Gray.
GS	General support.
H	General support maintenance.
hex	Hexagonal.
HI	High.
Hz	Hertz (cycles per second).
ID	Inner diameter.
in.	Inch.
KT	Kit.
LO	Low.
MAC	Maintenance allocation chart.
MED	Medium.
MEDSOM	Medical supply, optical, and maintenance.

MTOE	Modified table of organization and equipment.
NO.	Number.
NSN	National stock number.
O	Unit maintenance.
OD	Outer diameter.
ORG	Orange.
PMCS	Preventive maintenance checks and services.
PT	Pint.
PNK	Pink.
QA	Quality assurance.
QC	Quality control.
QTY	Quantity.
RO	Roll.
RX	Reparable exchange.
SB	Supply bulletin.
TB	Technical bulletin.
V	Volts.
VIO	Violet.
WHT	White.
YEL	Yellow.

Index

This index is organized alphabetically by topic and by subtopic within a topic. Topics and subtopics are identified by paragraph number.

Administrative storage, 1-5
Auxiliary equipment, 2-3
Basic issue items, 3-3
Caution, 3-12, 3-18, 3-19, 3-21
Cleaning solutions, 3-18, 3-19, 3-20
Common names, 1-8
Complaints, medical materiel, 1-9
Components of end item, 3-3
Decals, 1-13
Deficiencies, reporting, 3-14
Destruction of Army materiel, 1-4
Electrical
  Characteristics, 1-13
  Connections, 3-7
  Conversions, 3-9, 3-10
  Schematic, 3-16
Equipment
  Characteristics, capabilities, and features, 1-11
  Cleaning, 3-18
  Components, 1-12
  Control functions, 1-16
  Description, 1-12
  Differences, 1-14
  Dimensions, 1-13
  Inspection, 3-7
  Operation, 2-1, 2-4
  Schematic, 3-16
  Servicing, 3-7
  Shields, 1-12, 3-18
  Shipment, 3-25
  Shutdown procedures, 2-1
  Specifications, 1-13
  Start-up procedures, 2-1

Unpacking, 3-7
Expendable supplies, 3-4
Explanation of abbreviations and terms, 1-2
Foam, molded, 3-7
Forms, 1-3
Gas spring, 3-23
Handles, 1-12, 3-21
Identification plates, 1-13
Illumination factors, 2-2
Interval
Lubrication, 3-11, 3-12
PMCS, 3-13
Testing, 3-15
Lamp, 1-12, 1-13, 3-20, 3-22
Light pattern dimensions, 1-13
Lubrication, 3-11, 3-12
Maintenance functions, 3-1
Medical materiel complaints, 1-9
Model differences, 1-14
Molded foam, 3-7
Nomenclature cross-reference, 1-8
Note, 1-12, 2-1, 3-7, 3-12, 3-13, 3-22, 3-23, 3-25
Official nomenclature, 1-8
Operation auxiliary equipment, 2-3
Operation under unusual conditions, 2-4
Preventive maintenance checks and services, 1-5, 3-13
Procedures, initial operation, 2-1, 2-3
Purpose of equipment, 1-1
Quality assurance or quality control, 1-7
Records, 1-3
Reflector, 1-12, 3-19
Repair parts, 3-5
Reports, 1-3, 1-9
Safety, care, and handling, 1-15
Scope, 1-1
Shipment, 1-6, 3-25
Special tools, 3-6
Sterilization requirements, 3-21

Storage
  Administrative, 1-5, 3-25
  Preparation, 1-6, 3-25
Tabulated data, 1-13
Temperatures, 1-13, 1-15, 3-18, 3-21
Test equipment, 3-2
Tools, 3-2, 3-6
Troubleshooting
  Support level, 4-3
  Unit level, 3-16
Type of manual, 1-1
Unit level maintenance, 3-1
Voltage, 3-7, 3-8, 3-9, 3-10
Warning, 2-1, 3-8, 3-18, 3-19, 3-23
Warranty, 1-10

By Order of the Secretary of the Army:

CARL E. VUONO
General, United States Army
Chief of Staff

Official:

PATRICIA HICKERSON
Colonel, United States Army
The Adjutant General

Distribution:

To be distributed in accordance with DA Form 12-34-E, block 4405, Unit, Direct Support, and General Support Maintenance requirements for TM 8-6520-001-24&P.

RECOMMENDED CHANGES TO EQUIPMENT TECHNICAL PUBLICATIONS

SOMETHING WRONG WITH THIS PUBLICATION?

FROM (PRINT YOUR UNIT'S COMPLETE ADDRESS)
Cdr, USABBD
Maintenance Shop
Frederick, MD 21701

DATE SENT
20 Mar 89

PUBLICATION NUMBER	PUBLICATION DATE	PUBLICATION TITLE
TM 8-6520-001-24&P	6 Feb 88	Light Set, Dental Operating, Field

BE EXACT PIN-POINT WHERE IT IS

PAGE NO	PARA-GRAPH	FIGURE NO	TABLE NO	IN THIS SPACE TELL WHAT IS WRONG AND WHAT SHOULD BE DONE ABOUT IT:
2-7	2-10			Change lamp to light. REASON: Corrects nomenclature.
E-12		E-7		Reverse call-out numbers 6 and 7. REASON: Correctly identifies part.

SAMPLE

PRINTED NAME, GRADE OR TITLE AND TELEPHONE NUMBER
JOHN DOE, SFC, Maintenance Supervisor
DSN 343-XXXX

SIGN HERE
John Doe

DA FORM 1 JUL 79 2028-2 PREVIOUS EDITIONS ARE OBSOLETE.

P.S.—IF YOUR OUTFIT WANTS TO KNOW ABOUT YOUR RECOMMENDATION MAKE A CARBON COPY OF THIS AND GIVE IT TO YOUR HEADQUARTERS

☆U.S. Government Printing Office: 1988—491-003/50323

CUT ALONG PERFORATED LINE

RECOMMENDED CHANGES TO EQUIPMENT TECHNICAL PUBLICATIONS

THEN. . JOT DOWN THE DOPE ABOUT IT ON THIS FORM. CAREFULLY TEAR IT OUT. FOLD IT AND DROP IT IN THE MAIL!

SOMETHING WRONG WITH THIS PUBLICATION?

FROM: (PRINT YOUR UNIT'S COMPLETE ADDRESS)

DATE SENT

PUBLICATION NUMBER	PUBLICATION DATE	PUBLICATION TITLE
TM 8-6520-001-24&P		Light Set, Dental Operating, Field

BE EXACT PIN-POINT WHERE IT IS

PAGE NO	PARA-GRAPH	FIGURE NO	TABLE NO

IN THIS SPACE TELL WHAT IS WRONG AND WHAT SHOULD BE DONE ABOUT IT:

PRINTED NAME, GRADE OR TITLE AND TELEPHONE NUMBER

SIGN HERE

DA FORM 1 JUL 79 2028-2

PREVIOUS EDITIONS ARE OBSOLETE.

P.S.—IF YOUR OUTFIT WANTS TO KNOW ABOUT YOUR RECOMMENDATION MAKE A CARBON COPY OF THIS AND GIVE IT TO YOUR HEADQUARTERS

CUT ALONG PERFORATED LINE

☆ U.S. Government Printing Office: 1986—491-003/50523

REVERSE OF DA FORM 2028-2

FILL IN YOUR UNIT'S ADDRESS

FOLD BACK

DEPARTMENT OF THE ARMY

OFFICIAL BUSINESS

Commander
U.S. Army Medical Materiel Agency
ATTN: SGMMA-M
Frederick, MD 21702-5001

CUT ALONG PERFORATED LINE